800MHz/900MHz FM TRANSCEIVER

TK-940/941

SERVICE MANUAL

KENWOOD

B51-8281-00(N)1219

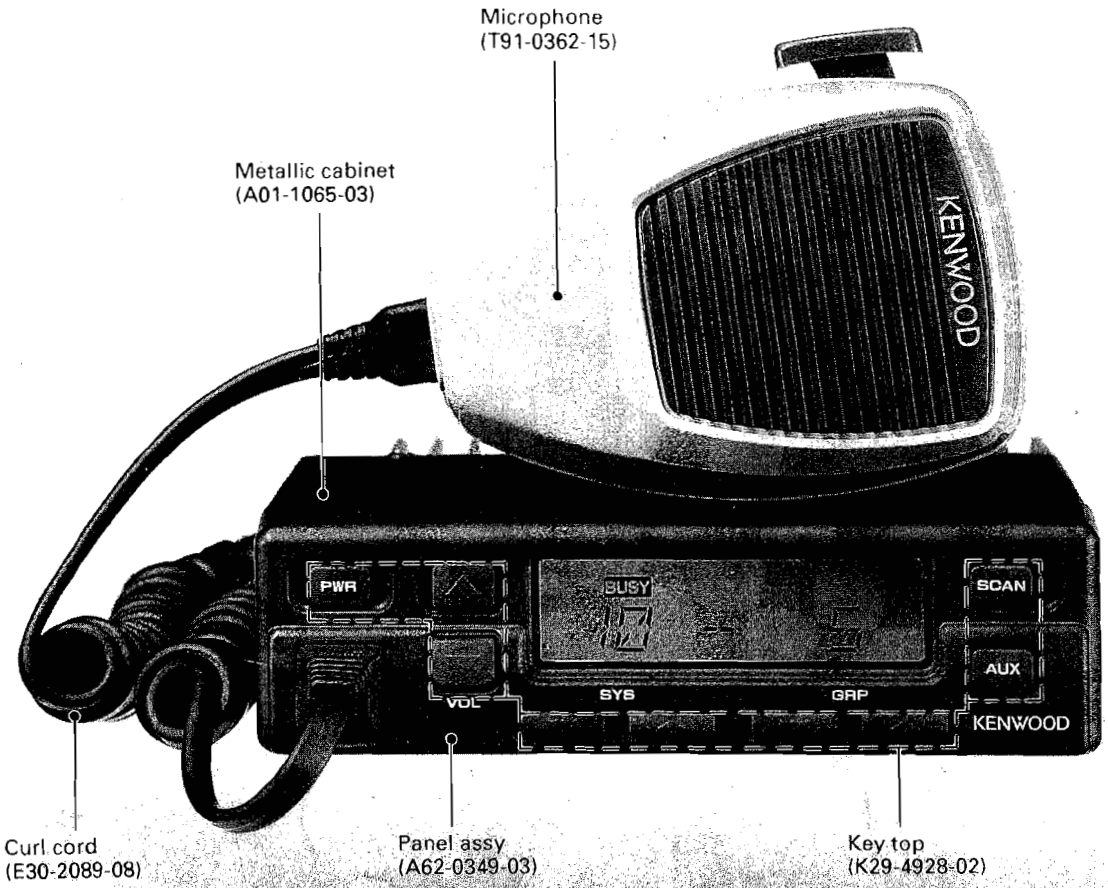

CONTENTS

GENERAL

INTRODUCTION

SCOPE OF THIS MANUAL

This manual is intended for use by experienced technicians familiar with similar types of commercial grade communications equipment. It contains all required service information for the equipment and is current as of the publication data. Changes which may occur after publication are covered by either Service Bulletins or Manual Revisions. These are issued as required.

ORDERING REPLACEMENT PARTS

When ordering replacement parts or equipment information, the full part identification number should be included. This applies to all parts : components, kits, or chassis. If the part number is not known, include the chassis or kit number of which it is a part, and a sufficient description of the required component for proper identification.

PERSONNEL SAFETY

The following precautions are recommended for personnel safety :

- DO NOT transmit if someone is within two feet (0.6 meter) of the antenna.
- DO NOT transmit until all RF connectors are verified secure and any open connectors are properly terminated.
- SHUT OFF and DO NOT operate this equipment near electrical blasting caps or in an explosive atmosphere.
- All equipment should be properly grounded before power-up for safe operation.
- This equipment should be serviced by a qualified technician only.

FCC COMPLIANCE AND TYPE NUMBERS

Type acceptance number	Frequency range	Compliance
ALHTK-940-1	806~870MHz	Part 90
ALHTK-941-1	896~941MHz	Part 90

PRE-INSTALLATION CONSIDERATIONS

1. UNPACKING

Unpack the radio from its shipping container and check for accessory items. If any item is missing, please contact KENWOOD immediately.

2. LICENSING REQUIREMENTS

Federal regulations require a station license for each radio installation (mobile or base) be obtained by the equipment owner. The licensee is responsible for ensuring transmitter power, frequency, and deviation are within the limits permitted by the station license.

Transmitter adjustments may be performed only by a licensed technician holding an FCC first, second or general class commercial radiotelephone operator's license. There is no license required to install or operate the radio.

3. PRE-INSTALLATION CHECKOUT

3-1. Introduction

Each radio is adjusted and tested before shipment. However, it is recommended that receiver and transmitter operation be checked for proper operation before installation.

3-2. Testing

The radio should be tested complete with all cabling and accessories as they will be connected in the final installation. Transmitter frequency, deviation, and power output should be checked, as should receiver sensitivity, squelch operation, and audio output. OT equipment operation should be verified.

GENERAL

4. PLANNING THE INSTALLATION

4-1. General

Inspect the vehicle and determine how and where the radio antenna and accessories will be mounted.

Plan cable runs for protection against pinching or crushing wiring, and radio installation to prevent overheating.

4-2. Antenna

The favored location for an antenna is in the center of a large, flat conductive area, usually at the roof center. The trunk lid is preferred, bond the trunk lid and vehicle chassis using ground straps to ensure the lid is at chassis ground.

4-3. Radio

The universal mount bracket allows the radio to be mounted in a variety of ways. Be sure the mounting surface is adequate to support the radio's weight. Allow sufficient space around the radio for air cooling. Position the radio close enough to the vehicle operator to permit easy access to the controls when driving.

4-4. DC Power and wiring

1. This radio may be installed in negative ground electrical systems only. Reverse polarity will cause the cable fuse to blow. Check the vehicle ground polarity before installation to prevent wasted time and effort.
2. Connect the positive power lead directly to the vehicle battery positive terminal. Connecting the Positive lead to any other positive voltage source in the vehicle is not recommended.

CAUTION

If DC power is to be controlled by the vehicle ignition switch, a switching relay should be used to switch the positive power lead. The vehicle ignition switch then controls DC to the relay coil.

---

3. Connect the ground lead directly to the battery negative terminal.
4. The cable provided with the radio is sufficient to handle the maximum radio current demand. If the cable must be extended, be sure the additional wire is sufficient for the current to be carried and length of the added lead.

5. INSTALLATION PLANNING – CONTROL STATIONS

5-1. Antenna system

Control station. The antenna system selection depends on many factors and is beyond the scope of this manual. Your KENWOOD dealer can help you select an antenna system that will best serve your particular needs.

5-2. Radio location

Select a convenient location for your control station radio which is as close as practical to the antenna cable entry point. Secondly, use your system's power supply (which supplies the voltage and current required for your system). Make sure sufficient air can flow around the radio and power supply to allow adequate cooling.

SERVICE

This radio is designed for easy servicing. Refer to the schematic diagrams, printed circuit board views, and alignment procedures contained in this manual.

Note

When you modify your radio as described in system set-up, take the following precaution.

The rating of pin 7 (SB) of the accessory connector cable (KCT-19) on the rear of the radio is 13.6V (1A). Insert a 1A fuse if you use the SB pin for external equipment.

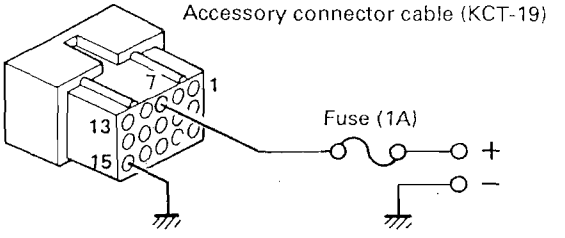

If you do not intend to use the 3.5-mm jack for the external speaker, fit the supplied speaker-jack cap (B09-0235-XX) to stop dust and sand getting in.

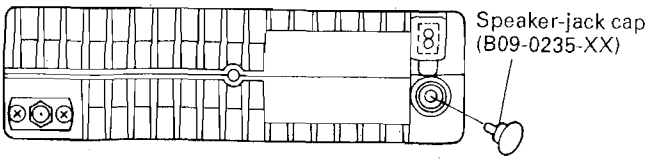

SYSTEM SET-UP

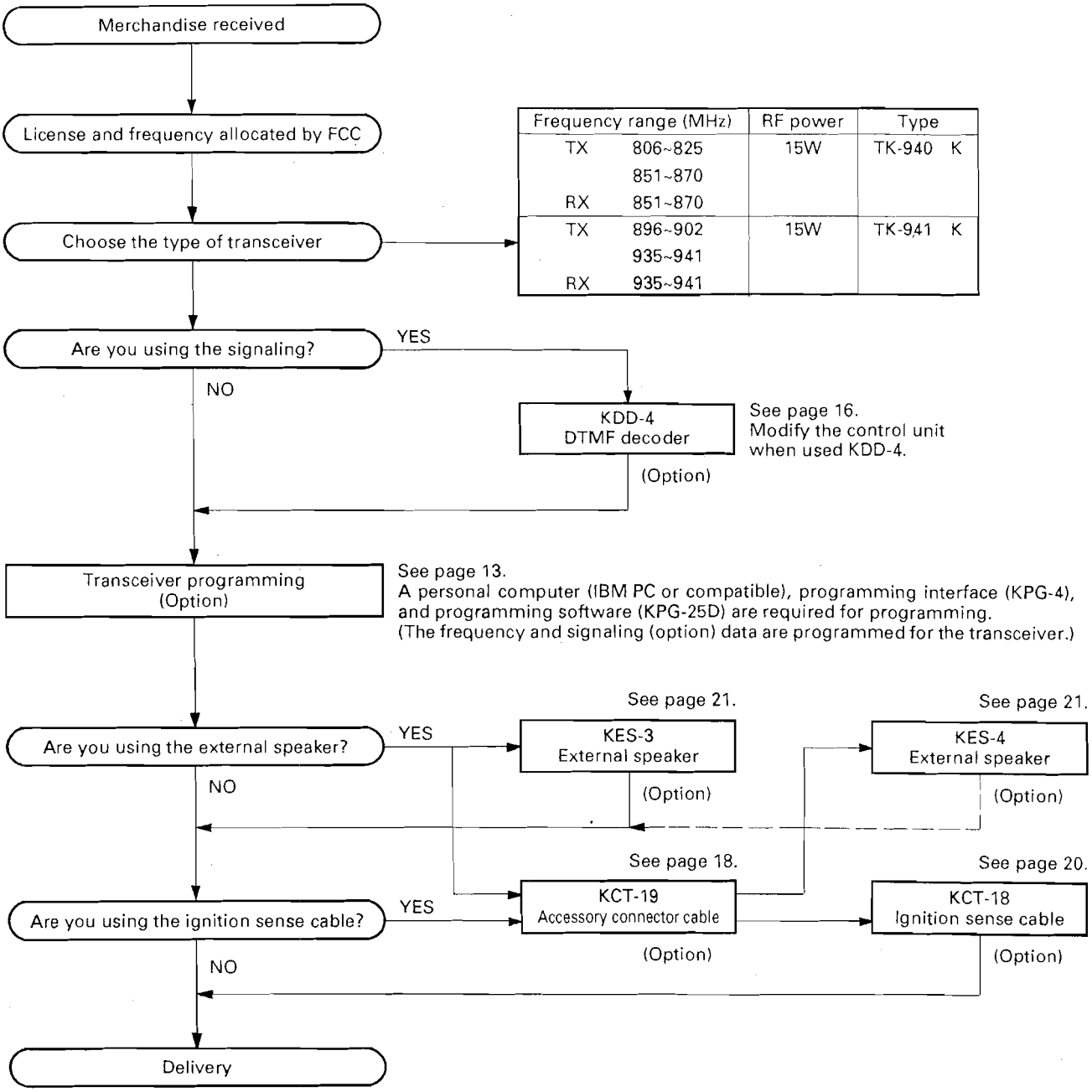

Frequency range (MHz)		RF power	Type
TX	806~825	15W	TK-940 K
	851~870		
RX	851~870		
TX	896~902	15W	TK-941 K
	935~941		
RX	935~941		

OPERATING FEATURES

1. Operation Features

The TK-940/941 is an 800/900MHz-band EFJ LTR™-compatible trunked radio designed to operate in both trunked and conventional modes. The programmable features are summarized.

1-1. General Transceiver Features

- Any combination of 32 (MAX) trunked and conventional systems programmable.
- Up to 250 (MAX) groups are programmable in each system.
- 8-digit alphanumeric characters are programmable for each group.
- Types system scan is selectable.
- System lockout for scanning.
- Time-out timer (Dispatoh/Telephone)
- CALL indicator
- Clear-to-talk
- External DTMF decoder (The optional KDD-4 DTMF decoder is required.)
- Test mode
- Horn alert port
- Data port

1-2. Trunked System Features

The following features are available with systems programmed for trunked transceiver operation.

- Group Scan
- Transmit Inhibit
- Telephone Interconnect (The optional microphone with DTMF pad is required.)
- Free System Ringback (This feature is available only when a telephone interconnect ID code is selected.)
- AUTO TEL (This feature is available only when a telephone interconnect ID code is selected.)
- Transpond.
- Talk-around (Can be set for each group.)
- System Search

1-3. Conventional System Features

The following features are available with systems programmed for conventional transceiver operation.

- Up to 250 (MAX) channels are programmable in each system. (Channels are selected using the GROUP key.)
- Carrier squelch and QT/DQT operation
- Transmit Disable (Receive-only channel)
- Talk-around (Can be set for each group.)
- Busy Channel Lockout (Can be set for each group.)

2. Transceiver Controls and Indicators (Fig. 1)

2-1. Font Panel Controls

All the keys on the front panel are momentary-type push buttons. The functions of these keys are explained below.

- **POWER key**

Transceiver POWER key. When the power is switched off, all the parameters, such as the system and group, are stored in memory. When the power is switched on again, the system returns to the previous conditions.

- **SYSTEM UP/DOWN key**

When the SYSTEM UP/DOWN key is pressed, the system number to be selected is incremented or decremented by one. When the key is held down, the system number changes continuously. After the system number reaches the highest system number, it goes back to the lowest system number. System numbers not set are skipped.

- **GROUP UP/DOWN key**

This key is operated in the same way as the SYSTEM UP/DOWN key. When the system number is changed, the GROUP indicator shows the original group number (the last selected group number in each system). The group to be set may differ by system.

- **SCAN key**

Each time this key is pressed, the system scan function is toggled on and off. The function of this key can be disabled by programming.

OPERATING FEATURES

- **AUX key**

This key toggles the auxiliary function on and off. If this key is pressed once, the auxiliary function is enabled. If the key is pressed again, the auxiliary function is disabled. The confirmation tone is the same as that of the scan key. The following auxiliary functions are available and can be programmed by the FPU:

1) Horn alert
2) Manual relay
3) System scan delete function
4) Fixed revert system call (invalid if the system is not set)
5) Switching between alphanumeric display and system/group indicator (toggle)
   (Invalid if the alphanumeric display is not set)
   When the alphanumeric display is selected, the confirmation tone is output for about 50ms.
   When the system/group indicator is selected, the confirmation tone is output twice (output 50ms, off 50ms, output 50ms).
6) AUTO TEL
7) Option signalling reset
8) Invalid

2-2. Front Panel Displays and Indicators

- **System display**

Indicates the selected system number (1~MAX 32). Only the programmed systems are displayed. The system display is located above the SYSTEM UP/DOWN key.

- **Group display**

Shows the selected group number (1~MAX 250). Zero indicates group 10. Only the programmed groups are displayed. The group display is located above the GROUP UP/DOWN key.

- **Scan indicator**

The (S) mark on the display goes on in system scan mode.

- **Delete (▶) indicator**

When a system locked out of the system scan sequence is selected, the ▶ mark on the display goes on. The mark flashes if there is a locked system during fixed system scan. (It does not light continuously or flash during list type scan.)

- **BUSY indicator**

The BUSY indicator goes on if the PTT button is pressed when the trunked system is busy or while a TX inhibit ID is being received.

- **CALL indicator**

The CALL indicator can be programmed so that it goes on when a specified call is received. This indicator goes off when any front panel key is pressed.

If the KDD-4 is installed and the call flag is Y, this indicator does not go on unless the DTMF code matches.

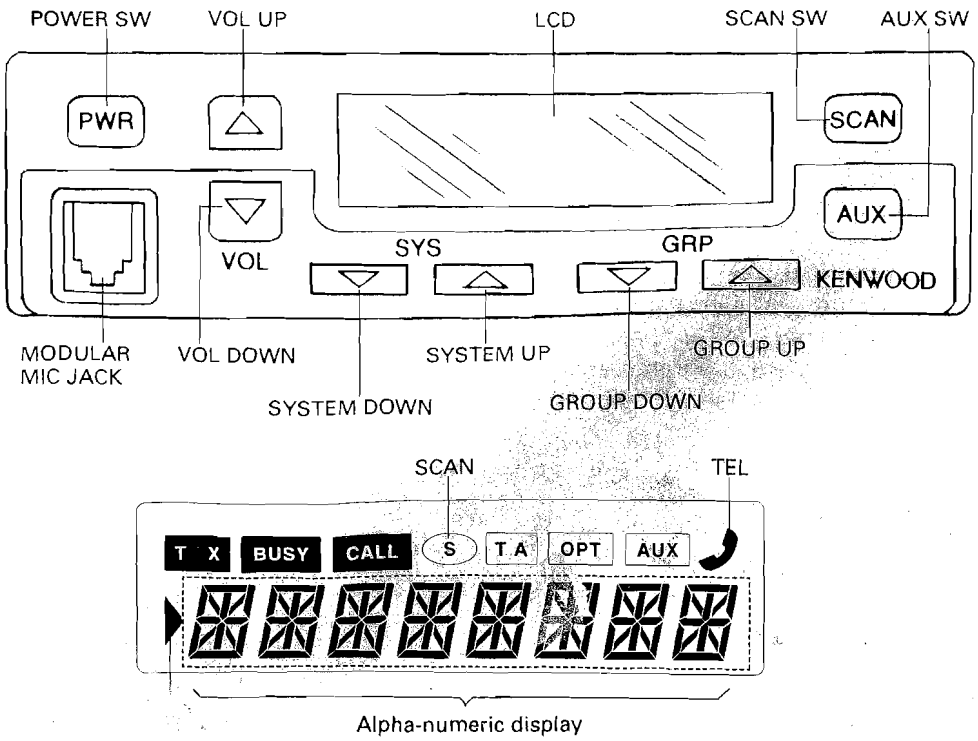

Fig. 1

OPERATING FEATURES

- **Alphanumeric display**

The 8-digit alphanumeric (A/N) display also shows system and group numbers. 8-digit alphanumeric displays can be programmed for each group. If the alphanumeric display is not programmed, the system and group numbers are displayed.

After the dealer's qualified service technician programs the transceiver, the alphanumeric display shows system numbers and group numbers for your specific network.

- **TA indicator**

Appears when the Talk-around system/group is selected.

- **OPT indictor**

Displays the KDD-4 decode latch of optional signaling.

- **AUX (Auxiliary) indicator**

Appears when the manual relay or horn alert function is activated (ON) by pressing the AUX key.

- **Handset indicator**

Appears when a group is selected that is programmed with telephone IDs. (It flashes during AUTO TEL.)

3. Details of Features

3-1. System Scan

System scan can be selected with the "SCAN" key by programming the scan feature. When the "SCAN" key is pressed and the Ⓢ mark appears, scan mode is entered. Scanning starts from the system following the currently displayed system. When scanning, "–SCAN–" is indicated on the alphanumeric display. When a call is received, scanning stops, and the system and group are displayed.

When the system or group or volume (AUX) key is pressed during scanning, the scan stops and the revert system or group can be changed. Scanning resumes one second after the key is released. If the scan feature is not programmed, the "SCAN" key on the front panel is ineffective.

3-2. System Lockout

The system lockout feature is used to lock systems out of the scan sequence, and can be selected by programming in the following two ways:

- **Fixed lockout**

The system to be locked out is selected by programming. When a locked system is selected, the Delete (▶) indicator appears on the left of the SYSTEM indicator. The revert system is scanned even if it is locked out. If there is a locked system, the Delete (▶) indicator flashes during fixed scanning. (It does not light continuously or flash during list type scan.)

- **User selectable lockout**

If the AUX (Auxiliary) key is programmed for the scan lockout feature, the user can lock systems out of the scan sequence with the AUX key. To lock a system out of the scan sequence, press the AUX key when the system is displayed. The Delete (▶) indicator is displayed on the left of the SYSTEM indicator.

To unlock a system, select the system and press the AUX key. The Delete (▶) indicator disappears to indicate that the system has returned to the scan sequence. The revert system is scanned even if it is locked out. If there a locked system, the Delete (▶) indicator flashes during fixed scanning. (It does not light continuously or flash during list type scan.) If all systems are locked out, the scan stops and only the revert system is received.

If another function is assigned to the AUX (Auxiliary) key, the USER SELECTABLE LOCKOUT feature does not function.

3-3. Drop-Out Delay Time (Scan Resume Time)

If a call is received during scan, the scan stops. The scan resume time can be programmed as 0 to 254 seconds in one-second increments. The default value is 3 seconds.

3-4. Dwell Time

The dwell time is the time after transmission ends until the scan resumes in scan mode. It can be set to 0 to 254 seconds by programming. The default value is 15 seconds.

OPERATING FEATURES

3-5. System/Group Revert

System/Group revert can be programmed for one of the following:

- **Last call revert**

The system or group changes to the revert system or group when a call is received with the system or group being scanned.

- **Last use revert**

If a system/group call is received during scanning and the PTT button is pressed for transmission and response within the drop out delay time, the system or group is assigned as the new revert system or group.

3-6. Scan Message Wait

The time for staying with the home repeater that receives a signal during system scan and monitoring data messages can be programmed. If there is no signal from the home repeater, the system is scanned for about 50ms. If there is a signal, three data messages are monitored. Normally, three data messages are monitored for each system, and it can be increased in multiples of three data messages per line to up to eight lines.

If the repeater data message indicates that there is no call, data monitoring is terminated and the home repeater of the next system is scanned.

3-7. Call Indicator

The call indicator can be programmed for each group. In trunked systems, it can be set to respond to a selectable decode ID or one of two fixed IDs, except block IDs. When a call is received with a selectable decode ID, the call indicator flashes. When a call is received with a fixed ID, the call indicator lights continuously.

In a conventional system, the call indicator can be programmed to light for each QT or DQT code. It keeps flashing while a call is being received. It is turned off by pressing any front panel key.

3-8. Time-Out Timer

The time-out timer can be programmed in 15 seconds increments from 15 seconds to ten minutes for dispatch and interconnect operations. If the transmitter is keyed continuously for longer than the programmed time, the transmitter is disabled and a warning tone sounds while the PTT button is held down. The alert tone stops when the PTT button is released. The default value is one minute for dispatch and three minutes for interconnect.

3-9. Priority ID Codes

The priority of the programmable decode ID codes for each system is as follows:

1) Fixed ID code 1
2) Fixed ID code 2
3) Selected ID code
4) Other selectable ID codes (Group scan only)
5) Block decode codes

When a call with a higher priority is received, that call is received immediately (except when the transceiver is trunked out).

3-10. Group Scan Operation

Group scan can be programmed for each group. In addition to the ID codes of the selected group, the ID codes of the other groups that are permitted for group scan are decoded. (The two fixed ID and block decode codes are always decoded.)

If, during group scanning, a call is received with one of the selectable group ID codes for which group scan is enabled, the group display indicates the group number that the call came in with. That group then becomes the new selected group. Group scan resumes after the specified drop-out delay time or dwell time shared by the system scan elapses.

3-11. Transmit Inhibit

The transceiver can be programmed with a transmit inhibit block of ID codes. If an ID code within this block is decoded the preset time before the PTT button is pressed, transmission is inhibited. The BUSY indicator lights and a busy tone sounds until the PTT button is released to indicate that transmission is not possible (except clear-to-talk mode).

Transmission with the group for which the encode ID is not set is inhibited, and the busy tone is output while the PTT button is held down, regardless of the clear-to-talk setting.

3-12. TEL ID Codes (TEL MODE)

The ID code in the TEL ID block can be used to make a phone call by programming the block. To make a phone calls, an optional DTMF microphone is required.

OPERATING FEATURES

3-13. Free System Ringback

This feature is available only when a telephone interconnect ID code is selected. If a busy tone sounds when the PTT button is pressed, the transceiver enters this mode automatically.

When the PTT button is released, a beep sounds for 400ms to indicate that the mode has been entered. If the scan is on, it is resumed (the (S) mark goes on.) When any repeater becomes available, a ringing tone sounds and this mode ends.

The mode is terminated when the system, group, scan, PTT, or AUX key is changed.

3-14. System Search

This feature can be programmed to automatically access other programmed systems when the selected system cannot be accessed. If an intercept tone sounds when the PTT button is pressed after setting the mode, the transceiver has entered the mode.

If the group ID is a telephone interconnect ID, the transceiver then attempts to access, in succession, other systems that have a telephone interconnect ID in the revert group location. If the group ID is a dispatch ID, the transceiver attempts to access other systems that have a dispatch ID programmed in the revert group location.

If there is no system to be accessed, an intercept tone sounds, the mode is terminated, and the transceiver returns to the first system. If the access is successful, the mode is terminated, and the searched system becomes the new selected system. (If during scanning, the scan stops.)

3-15. Transpond

This feature can be programmed to turn on and off for each group. If the ID of the group for which transpond is enabled is received, two data messages (transmit ID and turn-off code) are automatically transmitted if the PTT button is not pressed as a response within the time set (0 to 254 seconds in 1-second increments). If the PTT button is pressed within the time, or if the signaling option has been set, the transpond is not performed.

3-16. Talk-Around

This feature can be programmed to turn on or off for each group. When the PTT button is pressed for the group to which the talk-around feature is set, the home repeater channel is used for transmission, and the repeater link operation is not performed. Signaling must be in LTR format.

If clear talk is set, a proceed tone is output at the beginning of transmission. If both interconnect and talk around are [illegible] the talk around operation is not performed.

3-17. Preferred System Revert

This feature is available by assigning this feature to the AUX (Auxiliary) key. The feature is used to move the revert system/group to the fixed programmed system/group quickly. When the AUX key is pressed during scanning, the scan stops temporarily, and the revert system/group is displayed. The scan resumes about one second after the AUX key is released.

3-18. Alphanumeric Display Select

The system/group number display and the alphanumeric display can be switched with the AUX key by assigning this feature to the key. Figure 2 shows the characters that can be displayed. These are basic characters, and can be displayed in each segment. Four digits can be displayed at the same time.

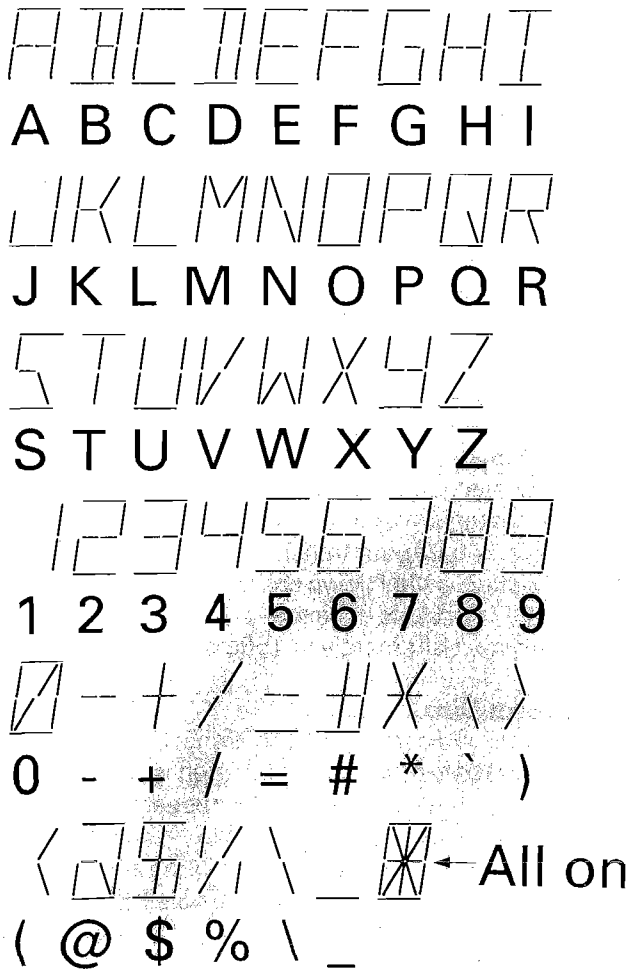

Fig. 2

OPERATING FEATURES

3-19. AUTO TEL

A telephone interconnect call can be made by simply pressing the AUX (Auxiliary) key by assigning this feature to the key. This feature accesses the TEL channel of the available system automatically.

When the AUX key is pressed, a queue tone is output, and the "AUTO TEL" appears on the alphanumeric display along with a flashing handset indicator ( ) to indicate that this mode has been entered. If the TEL ID is set for the revert system, the TEL channel of that system is accessed. If all TEL channels are busy, an attempt is made to access the TEL channels of another system in which the TEL ID code has been programmed. It is repeated for 60 seconds until the access succeeds. If the access succeeds, a dial tone returns from the repeater. If the AUX key is pressed again when the queue tone is sounding, this mode is canceled.

If the access fails after 60 seconds, a deny tone is output and this mode is terminated. When the talk ends, the revert system/group returns. When the scan mode is effective, the scan resumes. The AUTO TEL feature can be programmed to turn on or off for each system.

3-20. Audible User Feedback Tones

The transceiver outputs various combinations of three tones (high, mid, and low) to notify the user of the transceiver operating state. The main tones are listed below. The high tone is 1460Hz, the mid tone is 980Hz, the and low tone is 730Hz.

- **Busy tone**

This tone is output when the PTT button is pressed but no repeater is available and transmission is not possible. It is output until transmission is enabled while the PTT button is held down and transmission starts, or until the PTT button is released. (The mid tone and low tone are output alternately in 150ms intervals.)

- **Intercept tone**

This tone indicates that the transceiver is out of range. It indicates that the PTT button is pressed, and transmission has started, but the repeater cannot be connected and talking is not possible. It is output until the PTT button is released. (The mid tone and low tone are output alternately in 200ms intervals.)

- **Delay tone**

This tone is output when the PTT button is pressed and the repeater is accessed three times or more to indicate connection with the repeater is delayed. This tone is the same as the Busy tone. (It is not output of CLEAR TO TALK has been set to YES.)

- **Proceed tone**

This tone is output when the PTT button is pressed, transmission starts, and the repeater is connected to indicate that the user can talk if the Clear-to-Talk function has been set. (The high tone is output for 100ms.)

- **Queue tone**

This tone is output until the AUTO TEL function is set and the TEL channel is accepted successfully. (The mid tone on for 50ms, off for 50ms, and on for 50ms in 1 second intervals.)

- **Deny tone**

This tone is output if the AUTO TEL function is set, the queue tone is output, but the TEL channel cannot be accessed within 60 seconds. It is similar to the intercept tone. (The mid tone and low tone are output alternately in 150ms intervals.)

3-21. Clear-to-Talk

This feature can be programmed to turn on or off.

- **Clear-to-talk operation (Set to ON)**

If a dispatch ID is used and the PTT button is pressed when no repeater can transmit, a busy tone is not output (it is output when an interconnect ID is used). If transmission becomes possible while the PTT button is held down, transmission starts.

When connection with the repeater is completed, a proceed tone is output. The delay tone is not output in this mode. (It is output when an interconnect ID is used.)

- **Normal operation (Set to OFF)**

If the PTT button is pressed when there is no repeater that can transmit signals (no free repeater or TX inhibit is enabled), a busy tone is output. If transmission becomes possible while the PTT button is held down, transmission starts. The delay tone is output if link operation is performed three to six times.

OPERATING FEATURES

3-22. Conventional System Operation

Up to 250 (MAX) channels can be programmed for each system programmed as a conventional system. Channels can be selected by the group key.

QT (Quiet-Talk), DQT (Digital Quiet-Talk), or carrier squelch can be set for transmit or receive channels. If signaling is set for transmission, a squelch tail eliminator (reverse burst or turn-off code) is transmitted.

- **Talk-around**

The Talk-around feature can be programmed for each channel.

- **Transmit disable (receive-only channels)**

Transmission can be programmed to be inhibited for each channel. This feature is used to set receive-only channels. When the PTT button is pressed on a receive-only channel, a busy tone sounds, and transmission is not performed.

- **Busy channel lockout**

The busy channel lockout feature can be programmed for each channel. If a channel is locked out by pressing the PTT button, a busy tone is output, and if transmission becomes possible, it starts.

- **Scanning conventional systems**

For the conventional system scan, only the revert channel of each system is scanned. If QT or DQT is set for the channel, the channels, including signaling, are scanned.

3-23. External Decoder (KDD-4 Option)

The optional DTMF decoder (KDD-4) can be installed in the transceiver. Use of the optional decoder can be programmed for each group (for each channel of a conventional system). The monitor key functions as the external decoder reset key

The KDD-4 can be set with the decode ID of each group. If it is supported, the following features are available:

- **Audio mute**

If the decode latch input port is low during reception and the LTR data or signaling matches (when the squelch is open if signaling is not set), the audio is output.

During system/group scanning, the "–SCAN–" display changes to the system/group display (or alphanumeric display). If it is the last call, the revert system/group returns.

- **Call indicator, alert tone**

If the Decode Latch input port changes from high to low during reception and the LTR data or signaling matches (when the squelch is open if signaling is not set), a KDD-4 alert tone is output. CALL lights or flashes (or nothing occurs) according to the CALL indicator set for each group.

The CALL indicator/KDD-4 alert tone does not operate unless the Decode Latch input port goes high.

- **Operation during scan**

If signaling matches during scanning, the scan stops at the system. The display shows "–SCAN–" until the Decode Latch input port goes low. When the port goes low, the system/group is displayed.

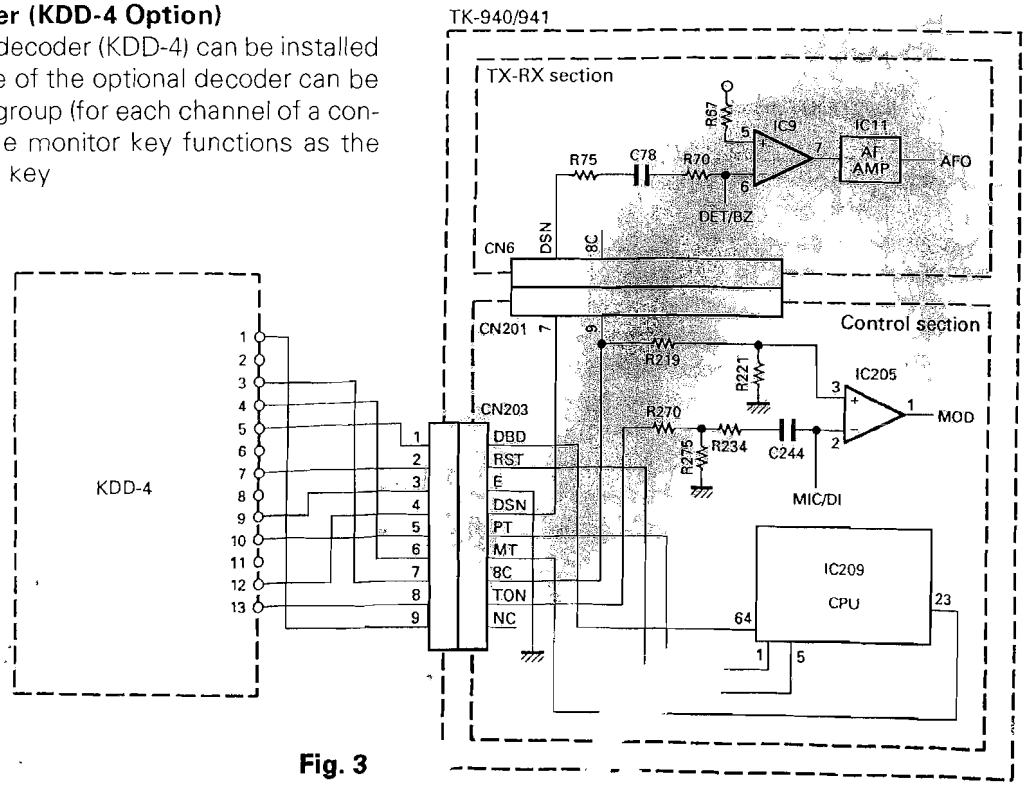

Fig. 3

OPERATING FEATURES

3-24. Horn Alert

Horn alert can be set to on or off for each group. Either continuous or non-continuous operation can be set by the FPU. The horn alert port is enabled or disabled as follows;

Offhook horn	Hook off	Hook on
Enable	O	O
Disable	X	O

• Non-continuous

If Horn alert has been set to YES for a group and DEC ID/QT/DQT matches, the horn alert port, HOR, is turned on and off as follows;

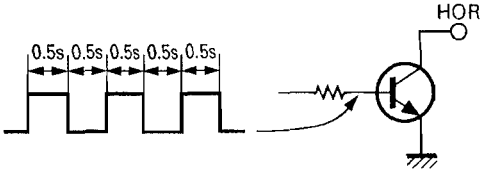

The timing when the fixed LTR ID matches is as follows;

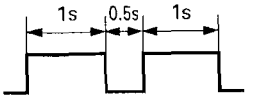

The group for which the optional signaling is set works by ANDing the decode ID with the optional signaling.

• Continuous

Reset with the AUX key or by setting offhook.

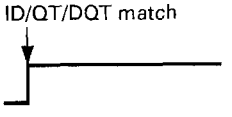

3-25. System Scan Type

• Fix system scan

All the set systems except locked-out ones are scanned. If the DEL/ADD feature is assigned to the AUX key, it can be controlled from the front panel.

• List type scan

A scan list can be set for each system.

The list to be scanned can be changed by changing the display system.

If many systems have been set, the scan speed can be increased by narrowing the systems to be scanned with scan lists.

3-26. Data Port

The following ports are available for external equipment when the KCT-19 is used.

• Terminal functions (Digital)

HOR — Horn alert port. For details of operations see the Horn alert section.

SQ — When a carrier is received, 5V is output. When the carrier disappears, 0V returns.

$\overline{\text{LOK}}$ — Goes low (0V) when communication becomes possible.
1) When a repeater is linked by LTR.
2) When transmission is started by pressing PTT when using LTR in TA mode.
3) When transmission is started by pressing PTT in the conventional mode.

$\overline{\text{DTC}}$ — When it goes low (0V), the last group in the system is gone to. When it goes high (5V), the original group returns.

TXD — Serial communication output from the internal MPU to external equipment.

RXD — Serial communication input from external equipment to the internal MPU.

OPERATING FEATURES

4. Transceiver Programming

4-1. Introduction

The TK-940/941 transceiver is programmed using an IBM PC or compatible machine, a programming interface (KPG-4), and a programming disk (KPG-25D). Figure 4 shows the setup for an IBM PC.

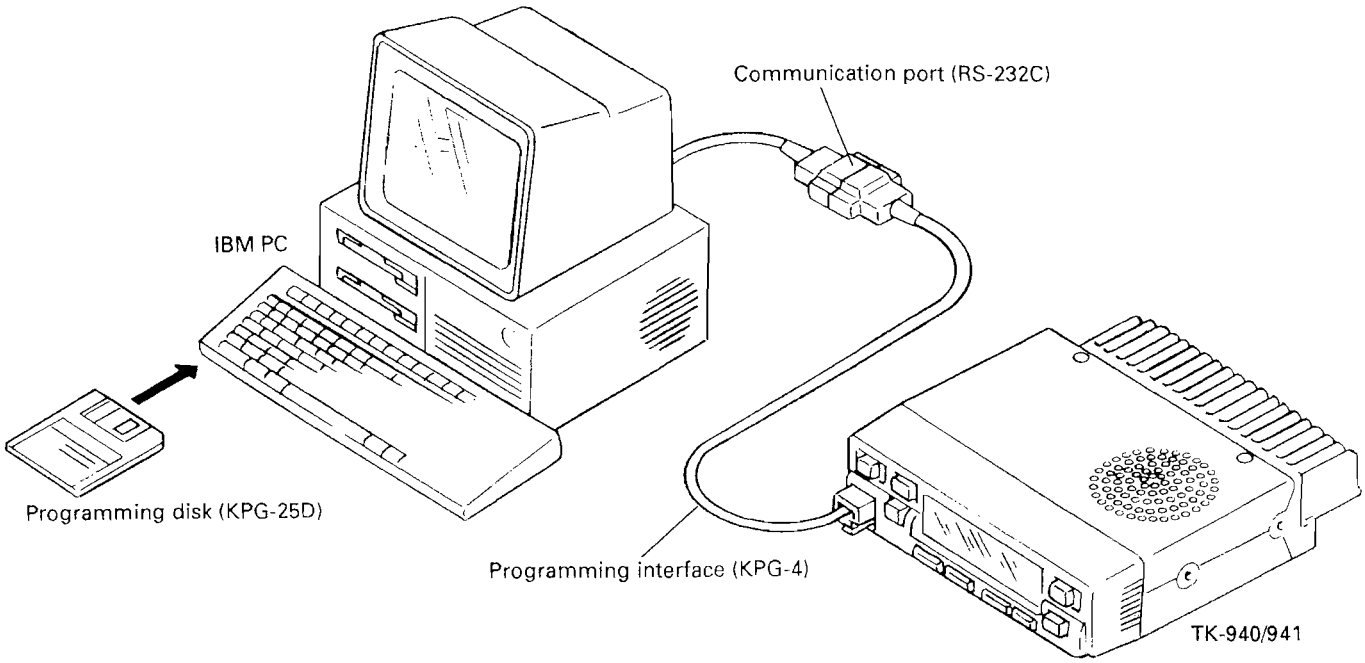

Fig. 4

4-2. KPG-4 Description (Optional PC programming interface cable)

The KPG-4 is reeded to connect the TK-940/941 to the computer. It has a circuit in the D-subconnector (25-pin) case that converts the RS-232C logic level to TTL level. The KPG-4 plug is connected to external socket of the TK-940/941 and to the computer by a conversion cable (option) with a 9-pin female connector and a 25-pin male connector.

4-3. Programming Software Description

KPG-25D is the programming software for the TK-940/941, supplied on a 3.5" or 5.25" floppy disk. This software runs under MS-DOS (version 3.3 or later) on an IBM /XT, AT, or PS2, or on a compatible machine. Data can be input to or read from the TK-940/941, and edited on the screen. Programmed data can be printed.

4-4. Data Program Mode

In this mode, data is written into the flash memory in the transceiver. When the power is turned on, data program mode can be entered immediately. When the KPG-4 is connected and commands can be received, "PROGRAM" is displayed to indicate that data program mode has been entered.

Tuning can be done using an IBM PC and KPG-25D, in the same way as in panel tuning mode. You can carry out panel tuning by selecting test mode on the KPG-25D menu screen and following the instructions on the screen. See the KPG-25D instruction manual for details.

OPERATING FEATURES

4-5. Clone Mode (Figure 5)

Programmed data is transferred from one transceiver to another by using a microphone cable.

1. Connect the master set to the slave set with.
2. Turn the slave set on
3. Hold down the AUX key, turn the master set on, and keep the AUX key down for two more seconds. "CLONE" appears on the display to indicate that clone mode has been entered.
4. Press the SCAN key on the master set. The (S) mark appears and data is sent from the master set to the slave set. "PROGRAM" appears on the slave set to show that it is receiving data.
5. When cloning is complete, the (S) mark on the master set disappears and "CLONE" changes to "END". The slave set is automatically reset and enters user mode.

If cloning fails, the master set shows "ERROR". Repeat steps 4 and 5.

If you wish to clone several sets, switch each of them on and repeat 4 and 5.

5. Description of Each Modes

5-1. Dealer mode

To enter this mode, hold down the GROUP UP key, turn the transceiver on, and keep the GROUP UP key down for two more seconds The mode can be inhibited by programming.

- **SYSTEM key**

Used to select one of programmed frequencies 1 to 16. If no frequency data has been preset, the frequency listed in Table 1 is written as the default value.

SYSTEM	Frequency	
	800MHz	900MHz
1	851.0500	935.0000
2	851.5500	935.0250
3	860.0000	938.0000
4	860.5000	938.0250
5	865.9875	939.9875
6	869.4000	940.4000
7	869.9000	940.9000
8	855.4000	936.2500
9	865.6000	939.3000
10	856.4000	936.7500
11	–	–
⋮	⋮	⋮
16	–	–

Table 1

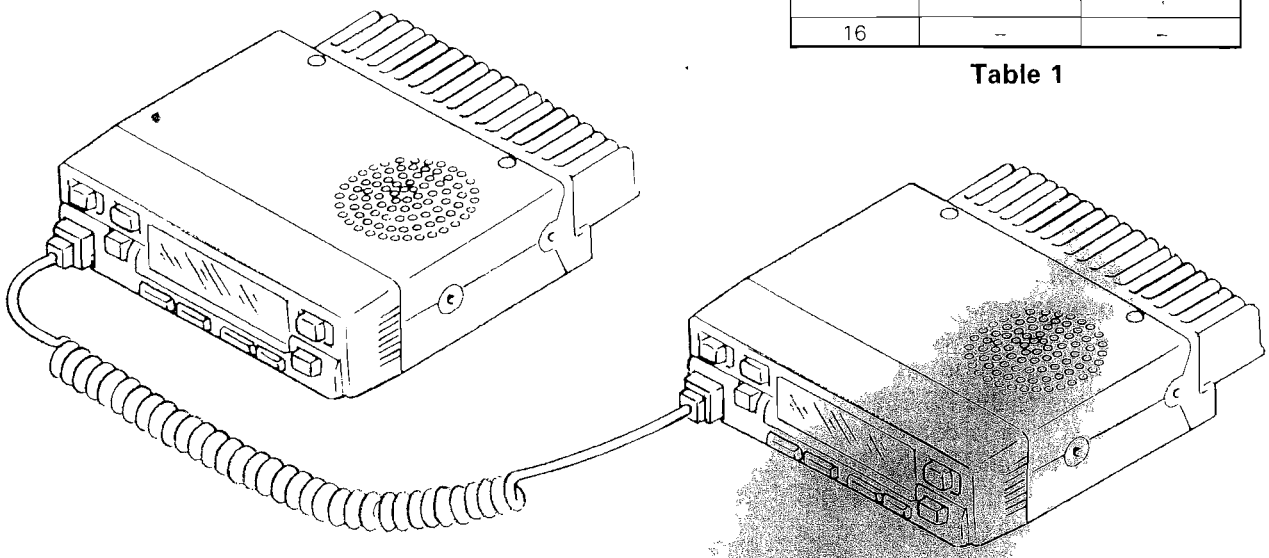

Fig. 5

OPERATING FEATURES

- **GROUP key**

Used to select the signaling encode/decode data or squelch adjustment.

GROUP	TONE
1	None (No decode; squelch can be adjusted.)
2	100Hz square wave (No decode; squelch can be adjusted.)
3	LTR format* (Decode; squelch cannot be adjusted.)
4	QT (67.0Hz) (Decode; Squelch cannot be adjusted.)
5	QT (151.4Hz) (Decode; squelch cannot be adjusted.)
6	QT (210.7Hz) (Decode; squelch cannot be adjusted.)
7	DQT (023N) (No decode; squelch cannot be adjusted.)
8	DQT (754N) (No decode; squelch cannot be adjusted.)

* Area : 0, Goto : 12, Home . 12, ID : 47, Free : 25

Table 2

- **AUX key**

When the AUX key is pressed, talk-around is enabled (the "TA" indicator appears), and transmission is possible on the receive frequency. When the key is pressed again, talk-around is disabled.

- **SCAN key**

When this key is pressed, the squelch is turned off. If a carrier is not present, white noise is heard. The "BUSY" indicator appears.

- **Transmission**

The microphone PTT key is used to start transmission. When the frequency and signaling have been selected with the SYSTEM and GROUP keys, transmission begins and the "TX" indicator appears. The time-out-timer does not work.

5-2. Panel Tuning Mode

This mode can be inhibited by programming. The following can be adjusted with the front keys:

- Squelch level
- QT fine deviation
- DQT fine deviation
  LTR ID fine deviation
- RF power
- DQT balance
- Maximum deviation
- Frequency (TX)

The mode is entered when the GROUP DOWN key is held down, the power turned on, and the key kept down for two more seconds. The display changes from "TUNING" to "800MHz" (TK-940) or "900MHz" (TK-941), and then back to the system/group number indication.

Select the frequency to be adjusted by pressing the SYSTEM key when the system/group number is being displayed, then press the SCAN key. Adjustment mode is entered and the adjustment level can be varied between 1 to 256.

- **SYSTEM key**

Used to select the frequency or items to be adjusted

- **GROUP key**

Used to select signaling encode/decode data or the adjustment level.

- **AUX key**

Used to determine the adjustment level. Select the level with the GROUP key and then press the AUX key. The adjustment level is written into the internal serial EEPROM.

- **SCAN key**

Used to switch between adjustment frequency variable mode and adjustment level (item) mode.

- **Volume key**

Used to vary the volume or adjust the AF power level.

INSTALLATION

1. Installing the Signaling Unit (KDD-4 DTMF : Option)

1-1. KDD-4 assembly

1. Solder the 9-pin leads with connector to the KDD-4 board locations designated with the unit specification numbers. (Fig. 1)

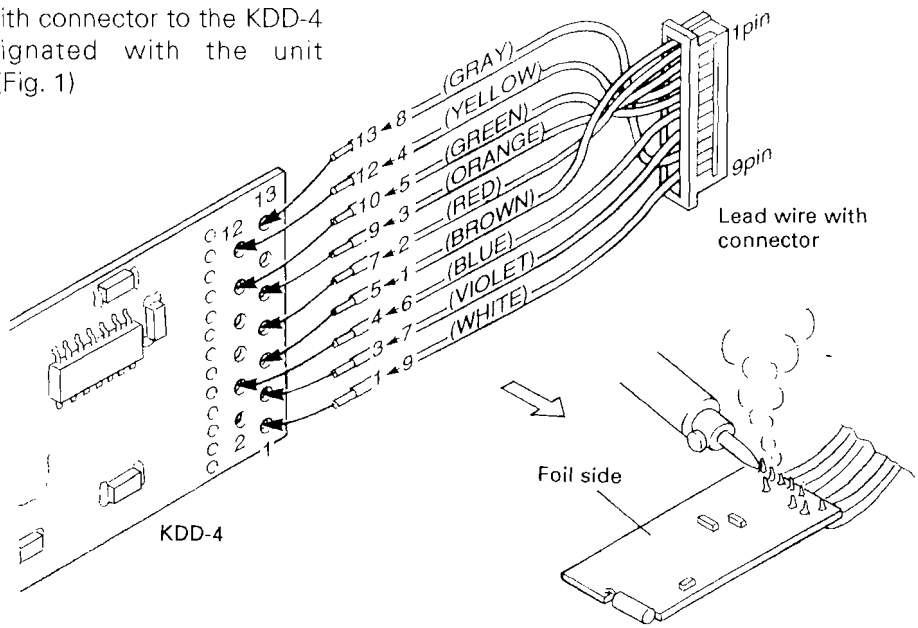

Fig. 1

2. Put an insulating tube around the KDD-4 board and heat it so that the tube encases the board. (Fig. 2)

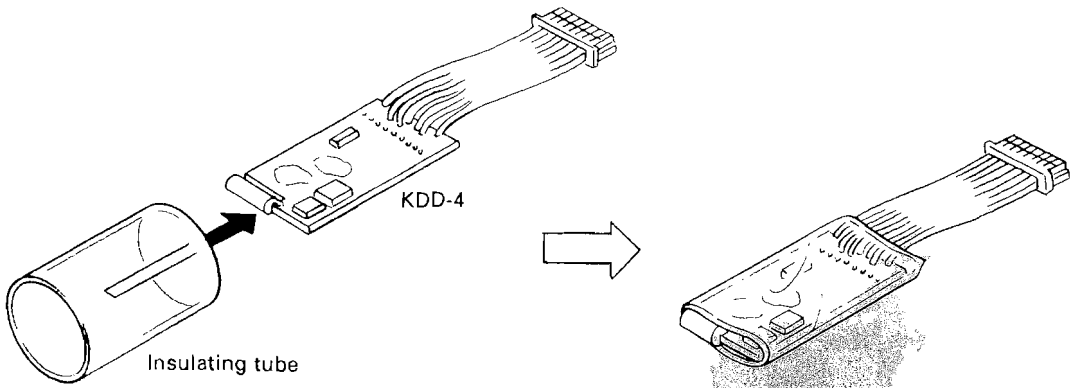

Fig. 2

INSTALLATION

1-2. Installing the KDD-4 in the transceiver

1. Remove the two halves of the case transceiver and the control panel. (Fig. 3)

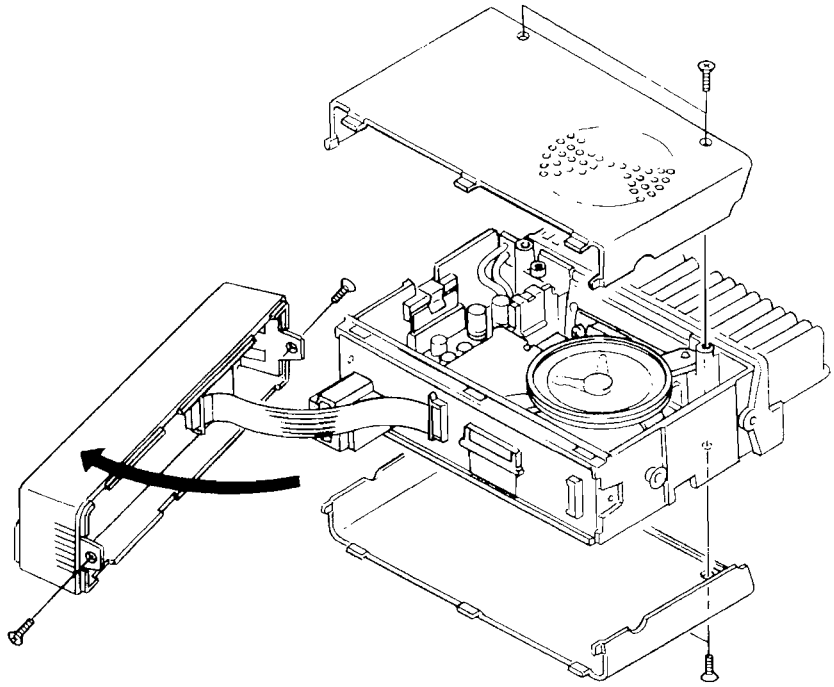

Fig. 3

2. Install the KDD-4 on the TX-RX unit (B/2). (Fig. 4)
   1) Attach the pad to the KDD-4 (❶).
   2) Plug the KDD-4 connector into CN203 of the TX-RX unit (B/2) (❷).
   3) Attach the KDD-4 to the TX-RX unit (❸).
   4) Reinstall the panel and the two halves of the cases.

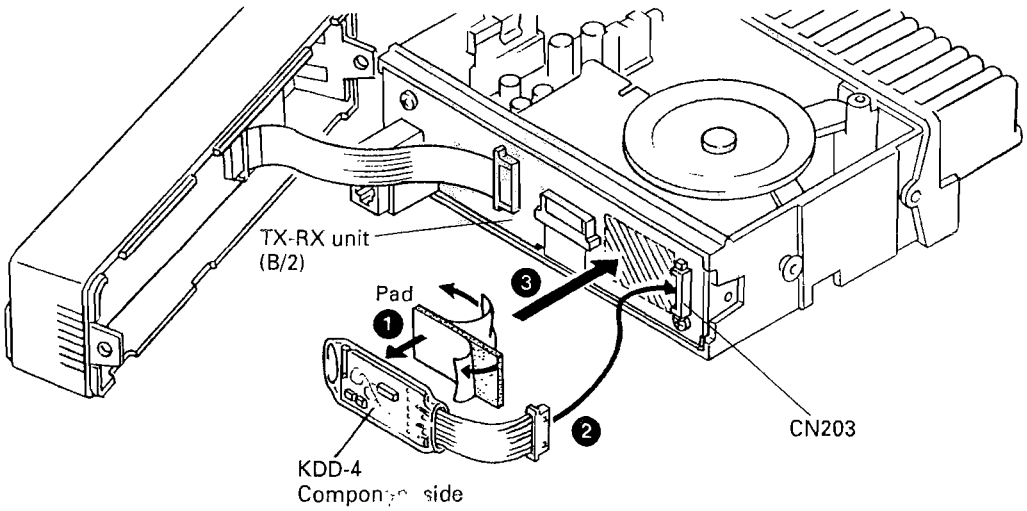

Fig. 4

INSTALLATION

1-3. Setting the KDD-4 code (DTMF)

This product is built using surface mount construction techniques. The solder jumpers used to configure this product should be changed using equipment and techniques suitable for surface mount device repair. Abuse due to the use of inappropriate tools and techniques will VOID the warranty.

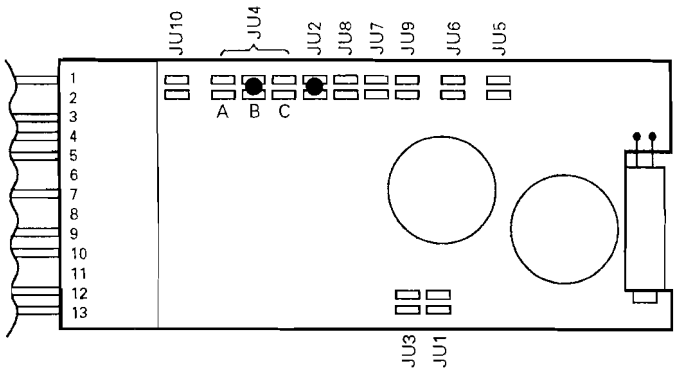

Fig. 5

MON/RESET >		ON-HOOK	OFF-HOOK
JU2	Shorted	Open circuit	(–) supply

JU3	JU4	MUTE	UNMUTE
Shorted	B	Open circuit	Sinks to (–) supply
Open	A	Sources (+) supply	Open circuit
Shorted	A	Open circuit	Sources (+) supply
Open	C	HCMOS HI (5Vdc)	HCMOS LO (0Vdc)
Shorted	C	HCMOS LO (0Vdc)	HCMOS HI (5Vdc)

JU1	Shorted	DTMF input 10~280mVrms.
JU7	Open	All call disabled
	Shorted	All call enabled
JU8 & JU10	Shorted	[5] (ORG/BLK) is deadbeat disable
JU9	Shorted	J1 pin 2 secondary programming
	Open	J1 pin 2 secondary set input

Table 1 Jumper setup charts

2. Accessory Connection Cable (KCT-19 : Option)

The KCT-19 is an accessory connection cable for connecting external equipment. The connector has 15 pins and the necessary signal lines are selected for use.

2-1. Installing the KCT-19 in the transceiver

1. Remove the upper and lower halves of the transceiver case, and lift the DC cord bushing (❶) from the chassis.
2. Remove the pad (❷).

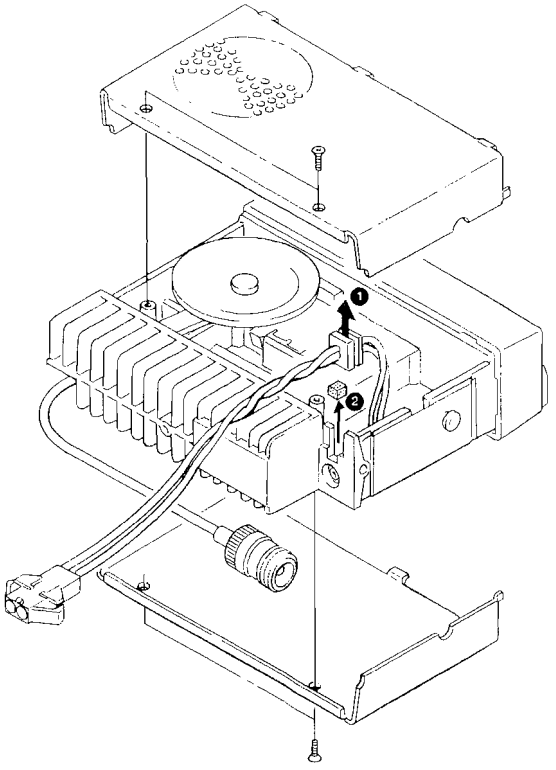

Fig. 6

INSTALLATION

3. Insert the KCT-19 cable (❸) into the chassis (❹). The wire harness band (❺) must be inside the chassis.
4. Relocate the DC cord bushing in the chassis (❻).
5. Connect the KCT-19 to the TX-RX unit (A/2) as shown in Figure 7 (❼).
6. Connect the KCT-19 to the external accessory by inserting the crimp terminal (❽) into the square plug (❾), both of which are supplied with the KCT-19.

2-1. Terminal function

No. (A)	No. (B,C,D)	Name	Function
A-1	D-2	HK	MIC hook input
A-2	D-5	ME	MIC GND
A-3	D-3	IGN	Ignition input
A-4	D-1	DEO	Detect output
A-5	D-6	MI	MIC input
A-6	B-2	E	GND
A-7	B-3	SB	DC supply (1A)
A-8	D-7	PTT	PTT input
A-9	D-4	DI	Data mod input
A-10	B-1	HOR	Horn Alert/Call output
A-11	D-8	SQ	Squelch output
A-12	C-1	SP	Audio output
A-13	E-1	LOK	Link complete output
A-14	E-2	RXD	Serial control data input
		MM	MIC mute input
A-15	E-3	TXD	Serial control data output
		DTC	Data PTT input

Refer to Termina function on page 63, if need description in detail.

- The functions of A-14 and A-15 are changed, if the connector E are connected to CN2 or CN3 of the radio.

No.	CN2	CN3
E-1	LOK	LOK
E-2	MM	RXD
E-3	DTC	TXD

- Connect CN5 of the radio to connector C of the KCT-19 instead of to the internal speaker connector, if use external speaker.

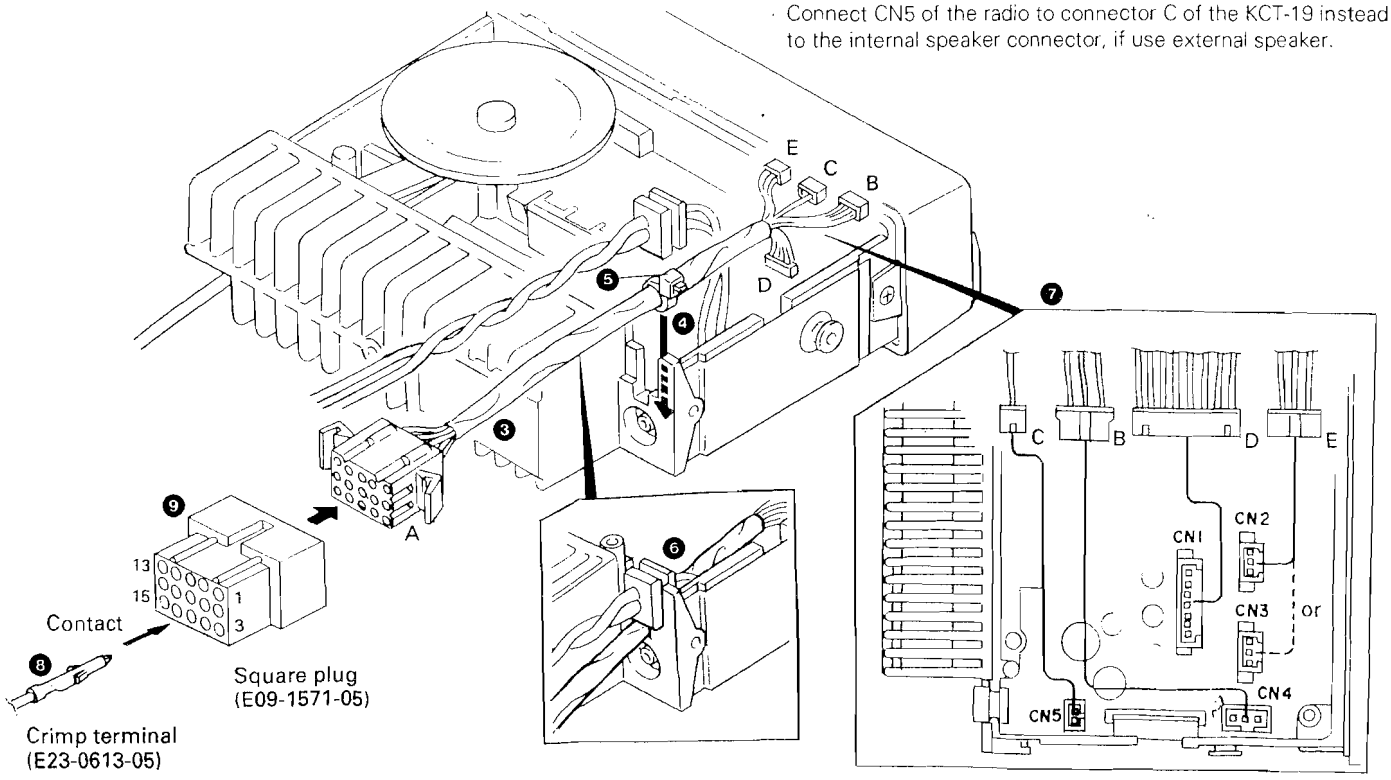

Fig.

INSTALLATION

3. Ignition Sense Cable (KCT-18 : Option)

The KCT-18 is an optional cable for enabling the ignition function. The ignition function lets you turn the power to the transceiver on and off with the car ignition key.

If you use the Horn Alert function (KDD-4 required) or the Manual Relay function, you can turn the function off while driving with the ignition key.

3-1. Connecting the KCT-18 to the transceiver

1. Install the KCT-19 in the transceiver (See the KCT-19 section.)
2. Insert the KCT-18 lead terminal (❷) into pin 3 of the square plug (❶) supplied with the KCT-19, then insert the square plug into the KCT-19 connector (❸).

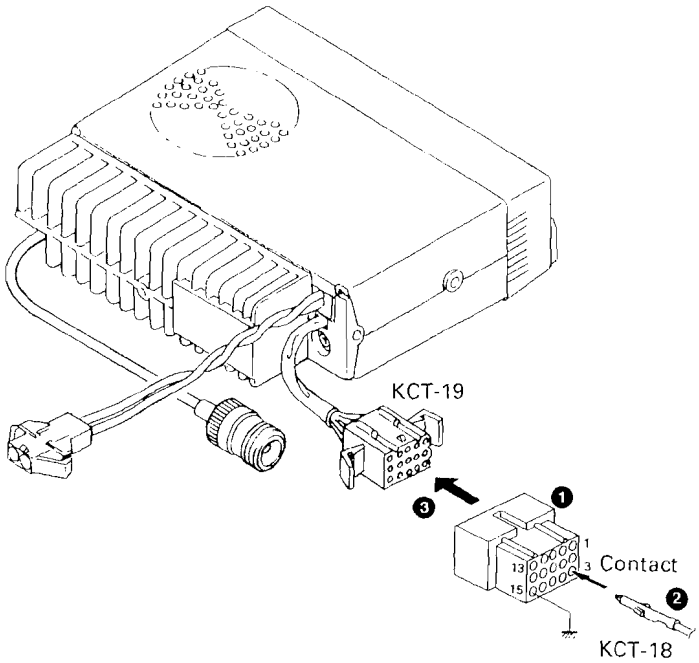

Fig. 8

3-2. Modifying the transceiver

Modify the transceiver as follows to turn the power or the Horn Alert or Manual Relay function on and off with the ignition key.

1. Remove the lower half of the transceiver case.
2. Set jumper resistors (0Ω) R5 and R6 of the TX-RX unit (A/2) as shown in Table 2.

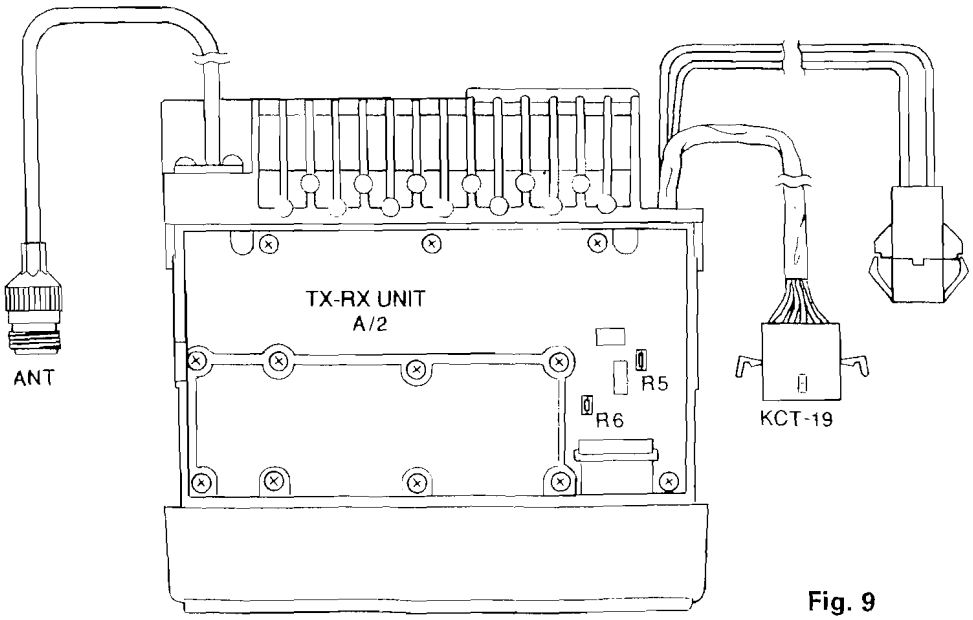

Fig. 9

Operation when KCT-18 is connected	R5	R6	
	Enable	Enable	← **KCT-18 cannot be connected**
Power on/off and Horn Alert or Manual Relay on/off	Disable	Enable	
Horn Alert or Manual Relay on/off	Enable	Disable	
	Disable	Disable	← **Power cannot be turned on**

Table 2 R5 and R6 setup chart

Thr[illegible] Alert or Manual Relay function can be turned on and off only if the function has been as[illegible] to the AUX key

INSTALLATION

4. External Speaker

4-1. KES-3 : Option

The KES-3 is an external speaker for the 3.5-mm-diameter speaker jack.

- **Connection procedure**

1. Connect the KES-3 to the 3.5-mm-diameter speaker jack on the rear of the transceiver.

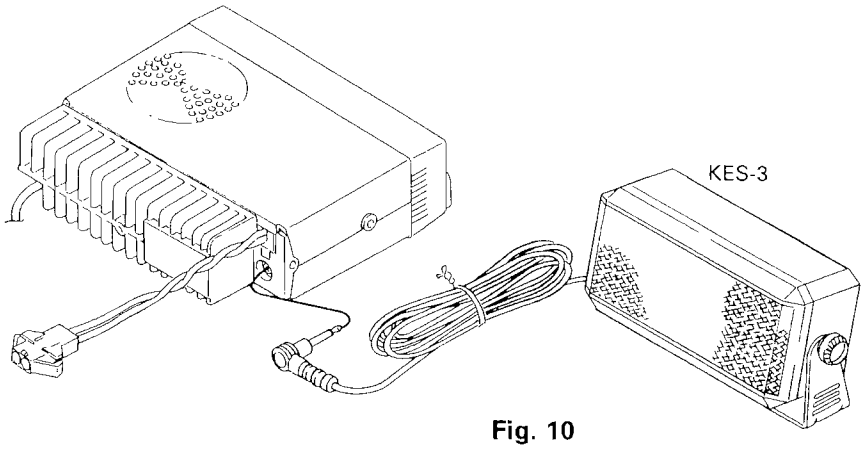

Fig. 10

4-2. KES-4 : Option

The KES-4 is an external speaker used with the accessory connection cable.

- **Connection procedure**

1. Install the KCT-19 in the transceiver. (See the KCT-19 section.)
2. Insert the crimp terminal into the square plug supplied with the KCT-19.
3. Connect CN5 of the transceiver to connector C of the KCT-19 instead of to the internal speaker connector.

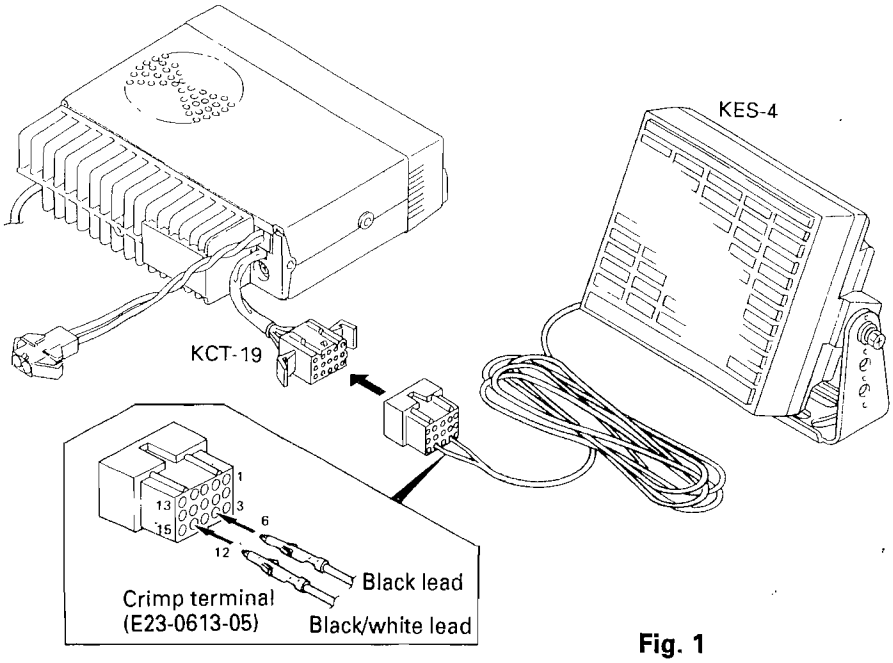

Fig. 1

INSTALLATION

5. Fitting the Control Panel Upside Down

The TK-940/941 control panel can be fitted upside down, so the transceiver can be mounted with its internal speaker (in the upper half of the case) facing down in your car

1. Remove the control panel and the TX-RX unit (B/2) control section. (Fig. 12)

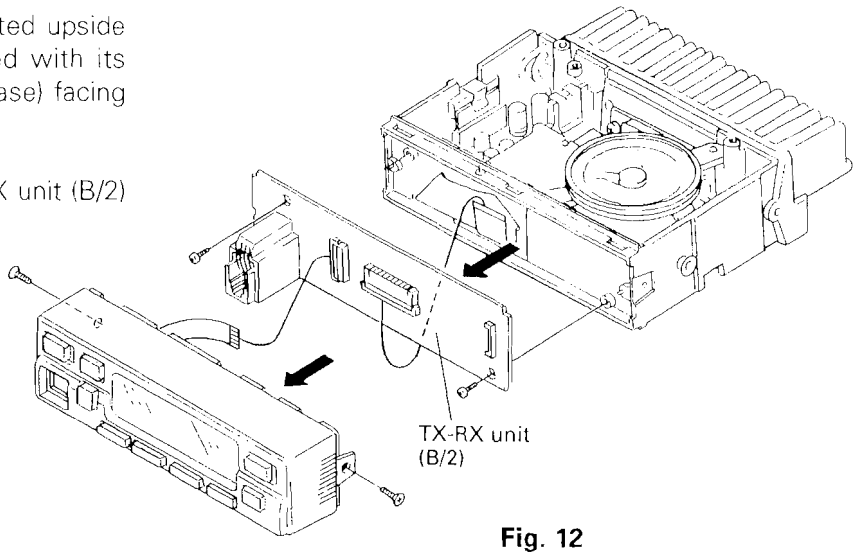

Fig. 12

2. Fold the flat cable (❶) differently (❷).
3. Turn the control section (❸) through 180 degrees (❹), and mount it on the transceiver (❺).
4. Insert the flat cable into control section connector CN201 (❻).

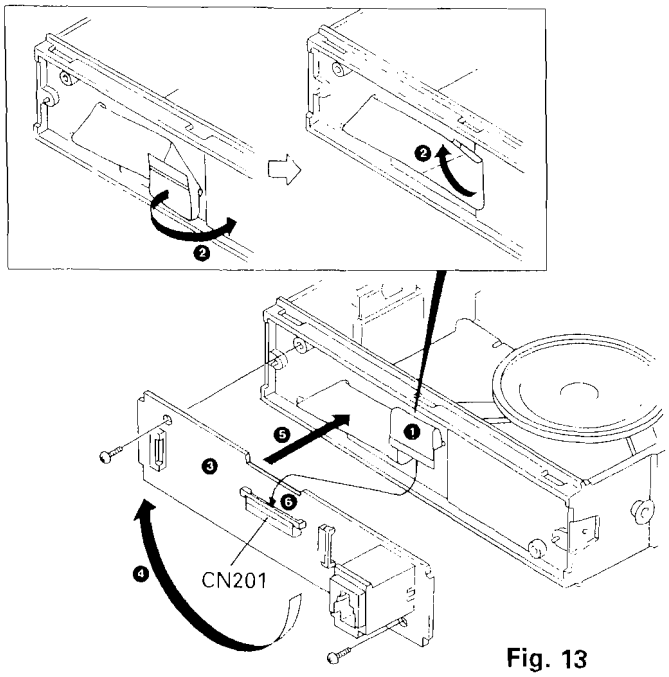

Fig. 13

5. Turn the pnel through 180 degrees and mount it on the transceiver. Refit the two halves of the case to complete installation (Fig. 14)

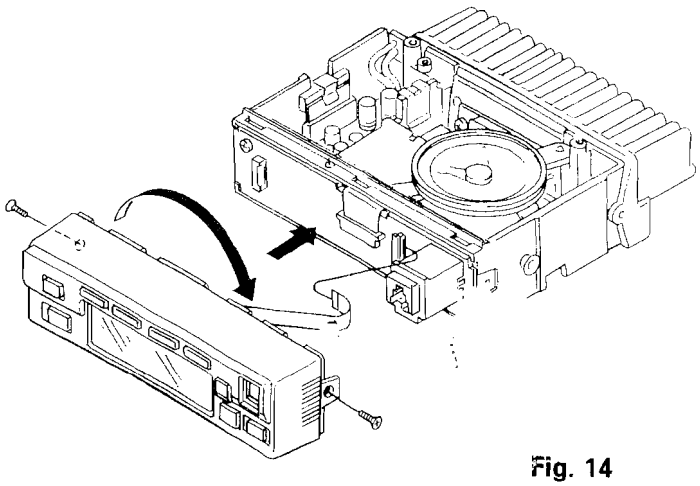

Fig. 14

TK-940/941

BLOCK DIA

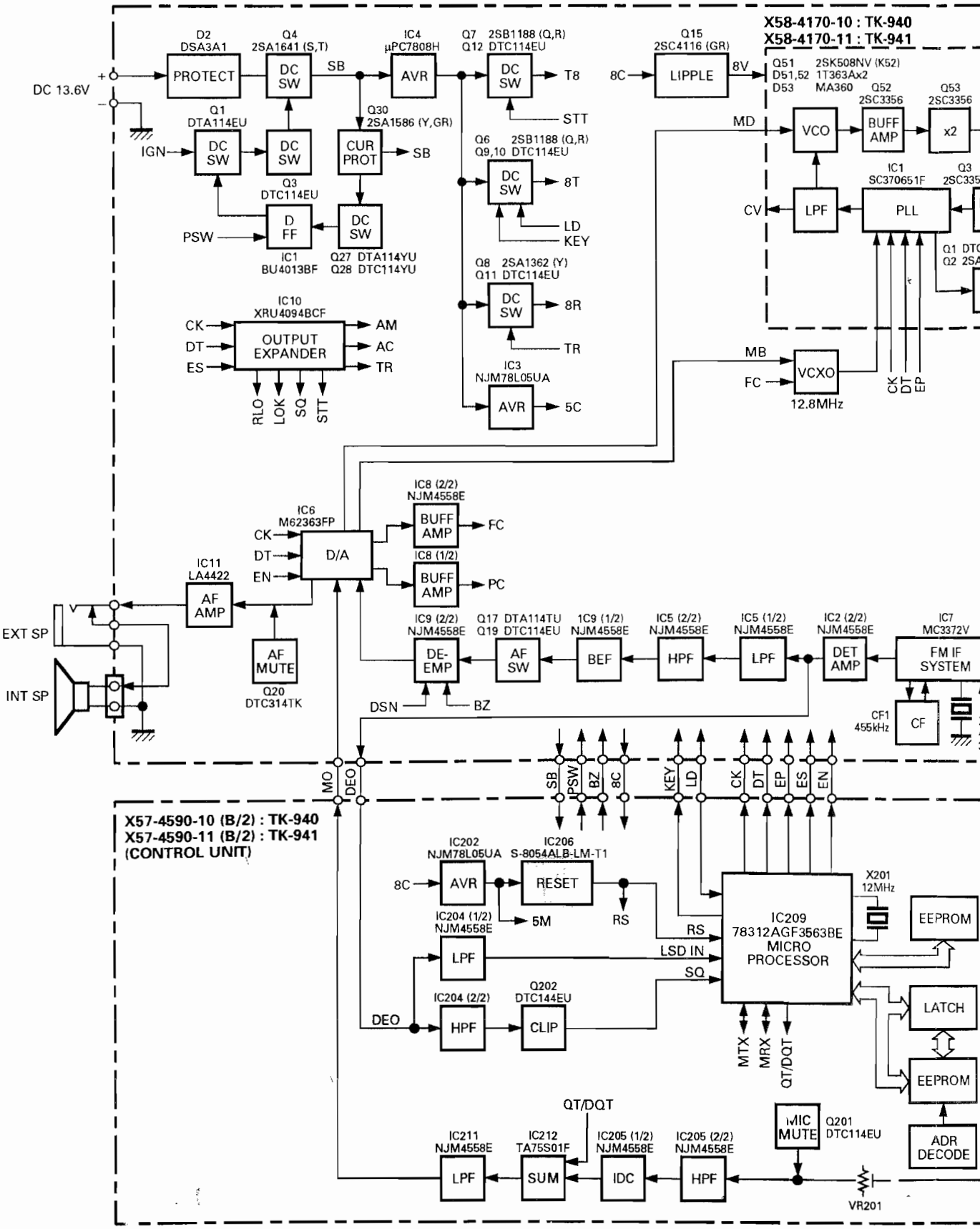

TK-940/941

DIAGRAM

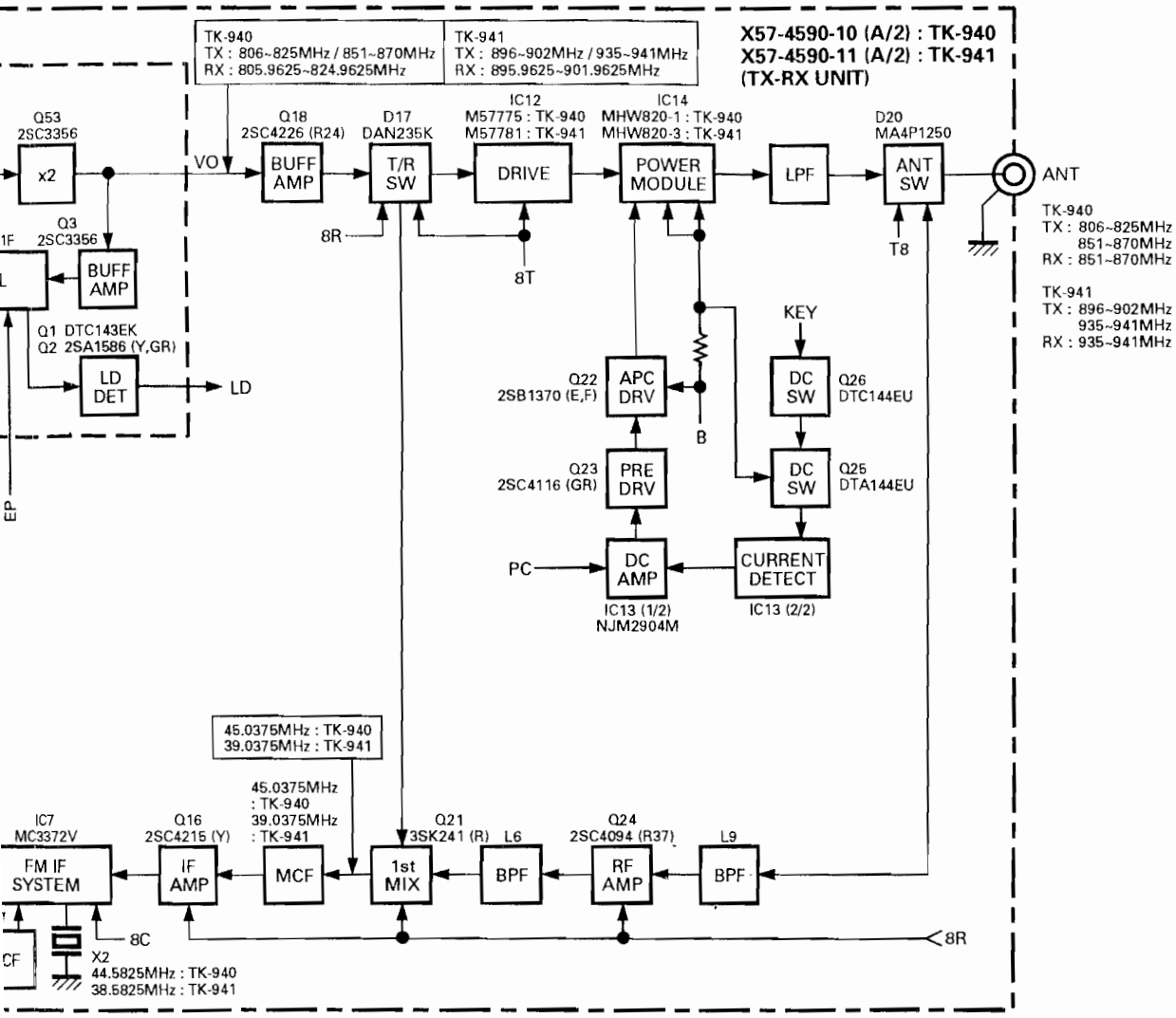

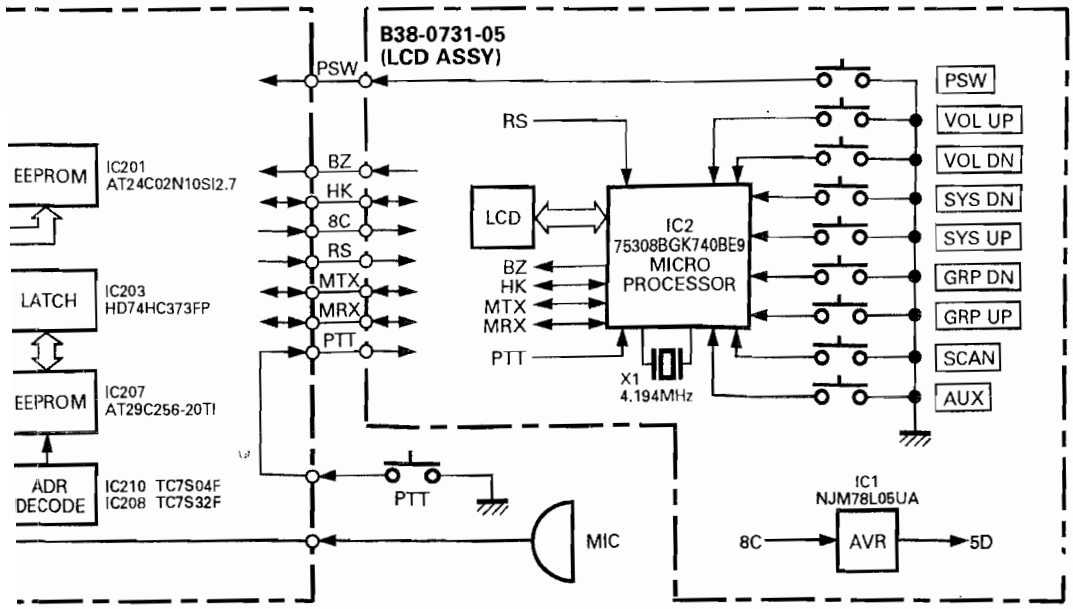

LEVEL DIAGRAM (TK-940)

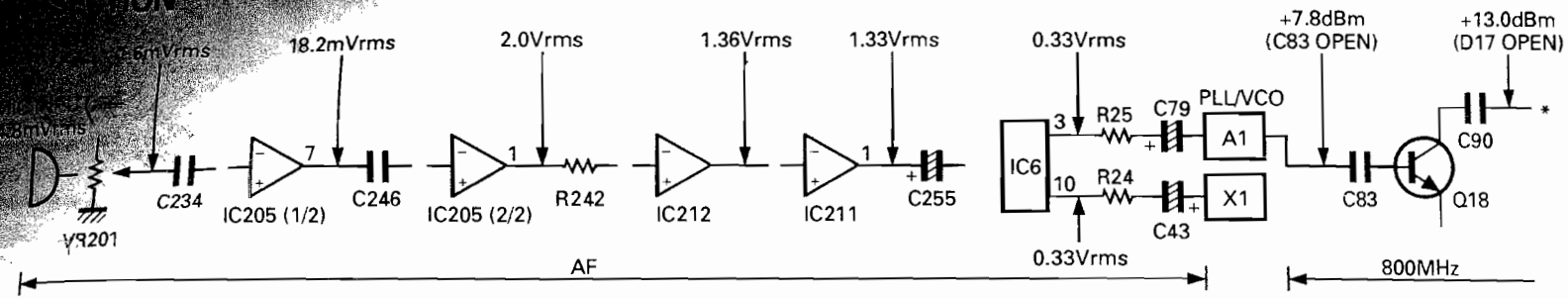

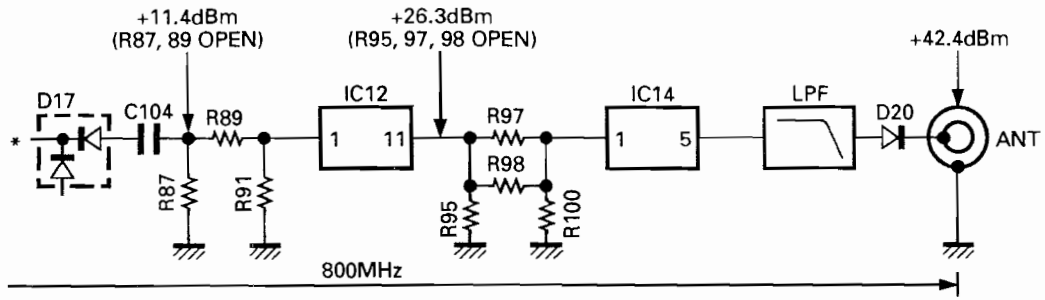

AG is set to that MIC input becomes 3kHz Dev at 1kHz MOD.
To make measurements in the AF section, connect the oscilloscope proves directly.
In the RF section, use a 1000pF coupling capacitor.

RX SECTION

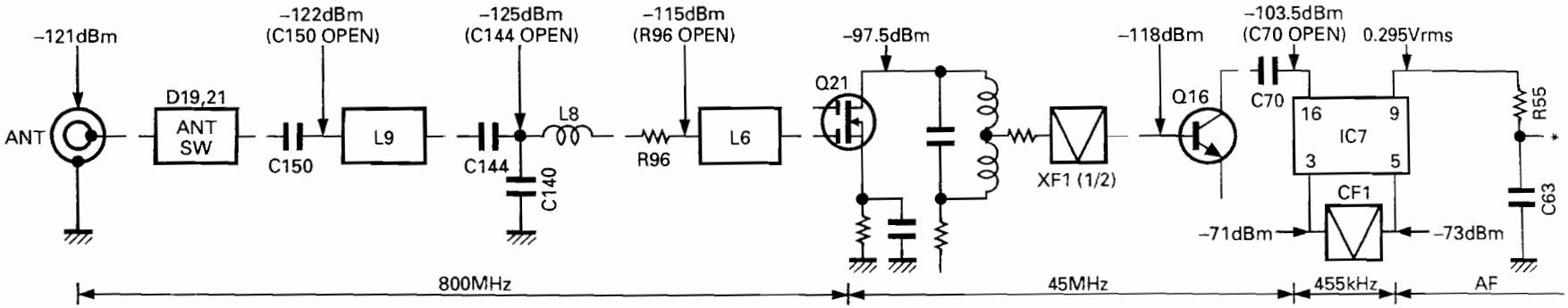

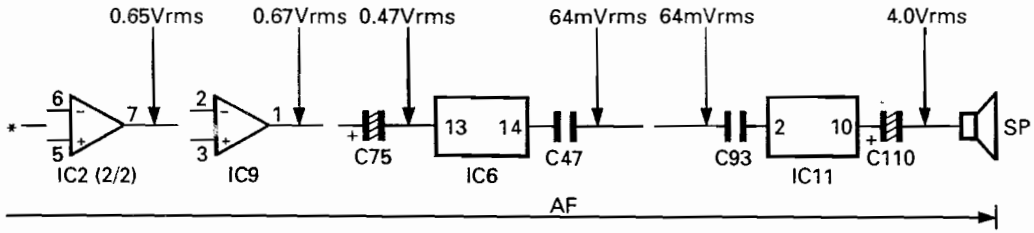

To make measurements in the AF section, connect the oscilloscope proves directly.
(ANT input : –47dBm, 1kHz FM, 3kHz dev.)
In the RF section, use a 1000pF coupling capacitor.
(The display shows the SSG input value required to obtain 12dB SINAD.)

LEVEL DIAGRAM (TK-941)

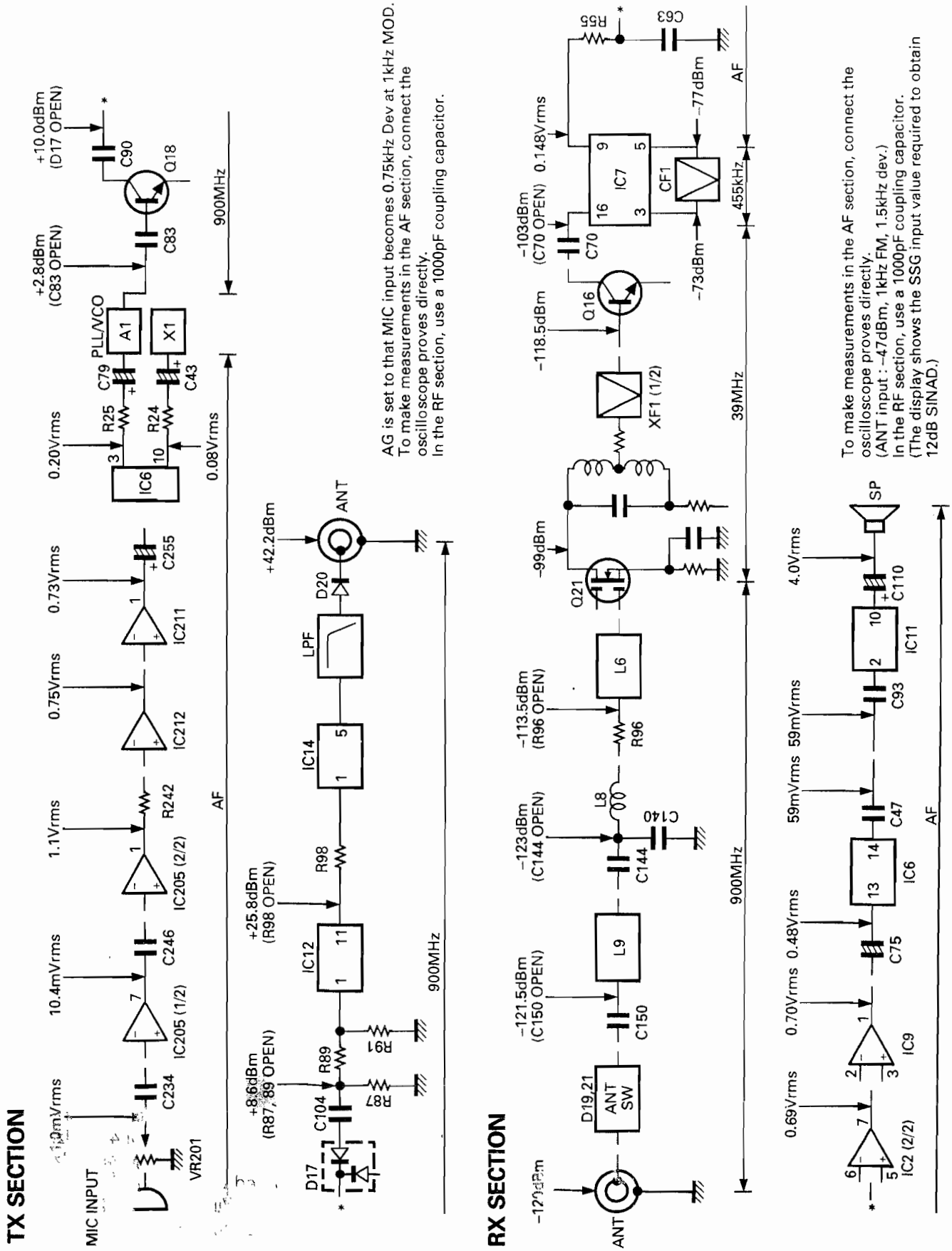

CIRCUIT DESCRIPTION

1. Overview

This transceiver is an 800MHz-band (TK-940), 900MHz-band (TK-941) EFJ LTR™ trunked-system-compatible FM transceiver that can be programmed to operate on both LTR and conventional systems.

2. Circuit Configuration by Frequency

The receiver is a double-conversion superhet with a first intermediate frequency (IF) of 45.0375MHz (TK-940), 39.0375MHz (TK-941) and a second IF of 455kHz. Incoming signals from the antenna are mixed with the local signal from the PLL to produce the first IF of 45.0375MHz (TK-940), 39.0375MHz (TK-941).

This is then mixed with the 44.5825MHz (TK-940), 38.5825MHz (TK-941) second local oscillator output to produce the 455Hz second IF. This is detected to give the demodulated signal.

The transmit signal frequency is generated by the PLL VCO, and modulated by the signal from the microphone. It is then amplified by TX amplifier and PA amplifier, and sent to the antenna.

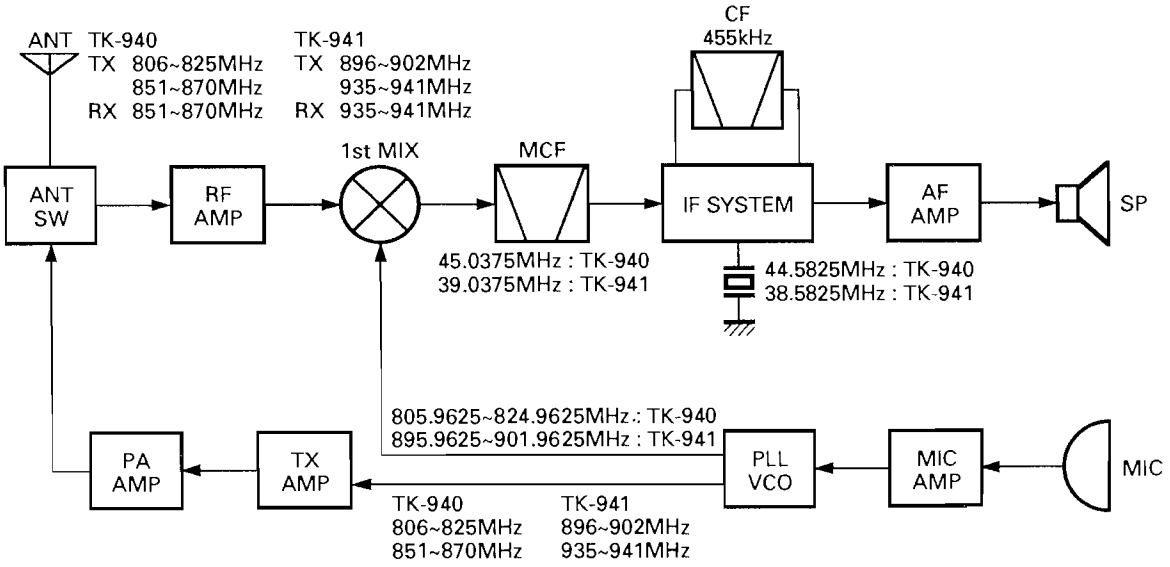

Fig. 1 Frequency configuration

3. Receiving System

3-1. RF unit

An incoming RF signal from the antenna terminal passes through the antenna switch (D19, D20, and D21 are off) and then the bandpass filter (L9). The signal is amplified by RF amplifier Q24, and passes through the bandpass filter (L6) again. The resulting signal goes to the first mixer (Q21), where it is mixed with the first local oscillator signal output from the frequency synthesizer to produce the first IF 45.0375MHz (TK-940), 39.0375MHz (TK-941).

3-2. IF unit

The first IF signal then passes through a four-pole monolithic crystal filter (XF1). The signal is amplified by first IF amplifier Q16 and goes to the second IF unit.

The second IF unit consists of an IF system IC (IC7) and the second mixer, second local oscillator, second IF filter, and FM detector. IC7 mixes the signal input to it with the 44.5825MHz (TK-940), 38.5825MHz (TK-941) second local oscillator output of the crystal oscillator (X2) to produce the second IF of 455kHz.

The 455kHz signal then goes through 455kHz ceramic filter CF1, is amplified by the limiter amplifier, demodulated by the quadrature FM detector (in the same IC), and output to the receive audio amplifier.

CIRCUIT DESCRIPTION

3-3. Audio amplifier unit

The demodulated signal is amplified by IC2 (2/2), and goes through a low-pass filter consisting of IC5 (1/2), a high-pass filter consisting of IC5 (2/2), and a BEF consisting of IC9 (1/2) to remove the unwanted audio signal.

The signal the passes through the de-emphasis circuit consisting of the AF switch (Q17 on) and IC9 (2/2), and the volume level is adjusted by the IC6 D/A converter. The resulting signal goes to audio amplifier IC11, is amplified, and is output to the speaker.

3-4. Squelch circuit

The detector output is amplified by IC2 (2/2) and passes through a high-pass filter consisting of IC204 (2/2), which removes the noise components from the signal. Q202 converts the noise pulse level by hysteresis and applies it to the CPU (IC209).

The CPU counts the pulses, integrates them, and turns the squelch on and off according to the calculated value.

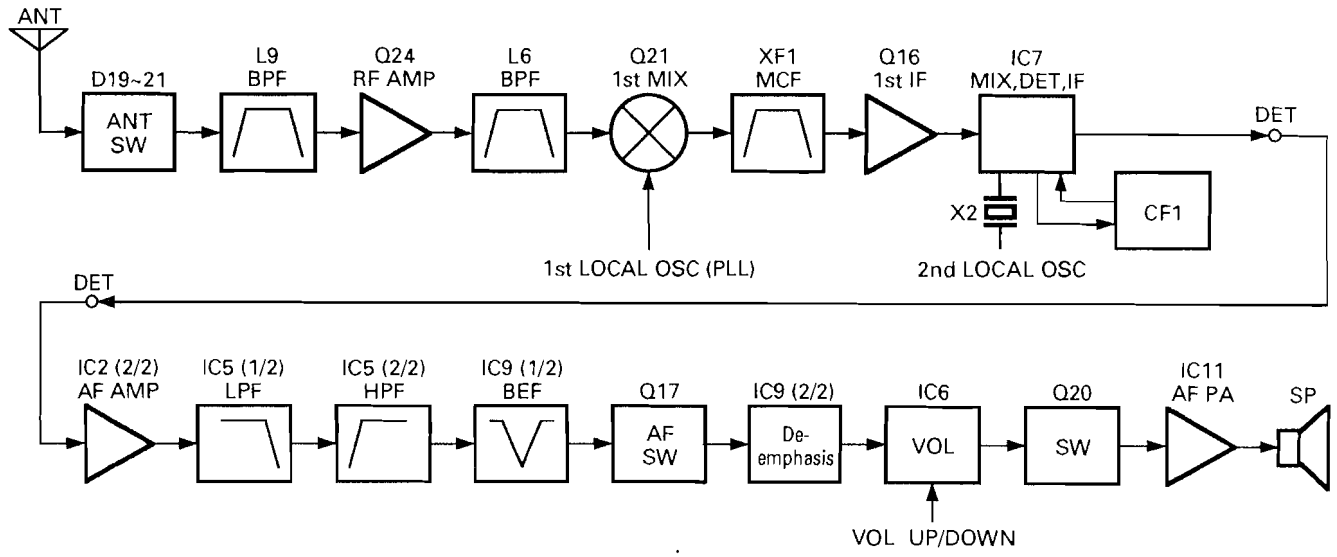

Fig. 2 Receiving system

CIRCUIT DESCRIPTION

4. Transmitter System

4-1. Microphone amplifier

The signal from the microphone goes to the microphone mute switch (Q201 off). It then passes through the high-pass filter in IC205 (2/2) and the pre-emphasis/IDC circuit in IC205 (1/2). (If the option has been installed, the signal is mixed with the encode signal.)

The signal is applied to the IC212 summing amplifier and mixed with QT and DQT from the CPU (IC209). It then passes through the splatter filter (the fourth low-pass filter) consisting of IC211 (1/2, 2/2), which removes unwanted harmonics.

The output from the low-pass filter is input to the D/A converter (IC6) to adjust the modulation.

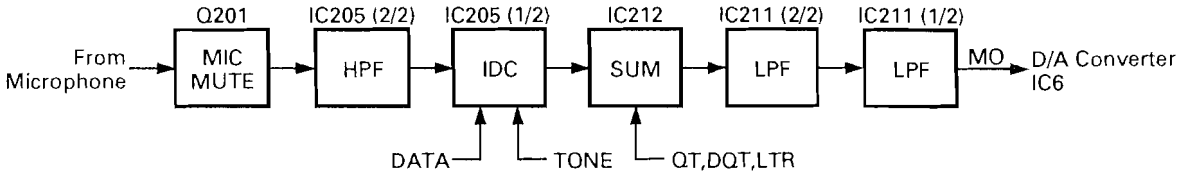

Fig. 3 Microphone amplification

4-2. Final amplifier

The signal from the PLL is amplified by two power modules (IC12 and IC14) to an output level of 15W, and goes through the harmonic filter and antenna switch D20, and on to the antenna terminal.

IC13 (1/2) compares the DC input to pin 2 with the reference voltage at pin 3 applied by IC8 (1/2), amplifies the result, and controls the DC amplifier (Q22 and Q23) to keep the transmit final current constant, thus keeping the transmit output constant.

4-3. APC circuit

The direct current that flows through the final module (IC14) produces a voltage across resistors R108, R109, and R110. This voltage is applied to pin 6 of IC13 (2/2), and is input as the reference voltage difference of pin 5 and amplified.

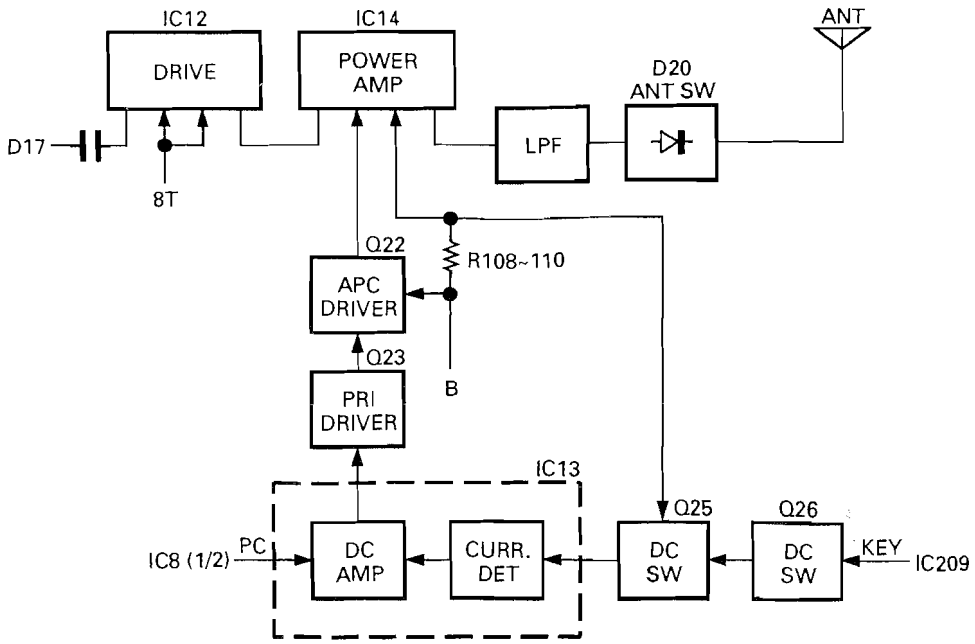

Fig. 4 Transmit power circuit and APC circuit

CIRCUIT DESCRIPTION

5. Frequency Synthesizer Unit

5-1. PLL

The frequency synthesizer consists of a VCXO (X1), and a VCO circuit, PLL circuit, and peripheral circuits.

The VCXO generates 12.8MHz. The frequency stability is within ±2.5ppm (TK-940), ±1.5ppm (TK-941) within the temperature range of –30 to +60°C. This output enters the PLL IC (IC1), and is divided by 1024 to produce a 12.5kHz reference signal.

The VCO output from the buffer amplifier (Q52) is doubled by Q53, amplified by buffer amplifier Q3, and sent to the PLL IC (IC1). The phase of this signal is compared with the 12.5kHz reference signal in IC1. The output from the phase comparator goes through the charge pump (in IC1) and low-pass filter, and on to the varactor diodes (D51 and D52) in the VCO unit, keeping the VCO frequency constant. The other output from Q53 is amplified by the RF amplifier (Q18), and output to the transmit or receive unit via the RF switch (D17).

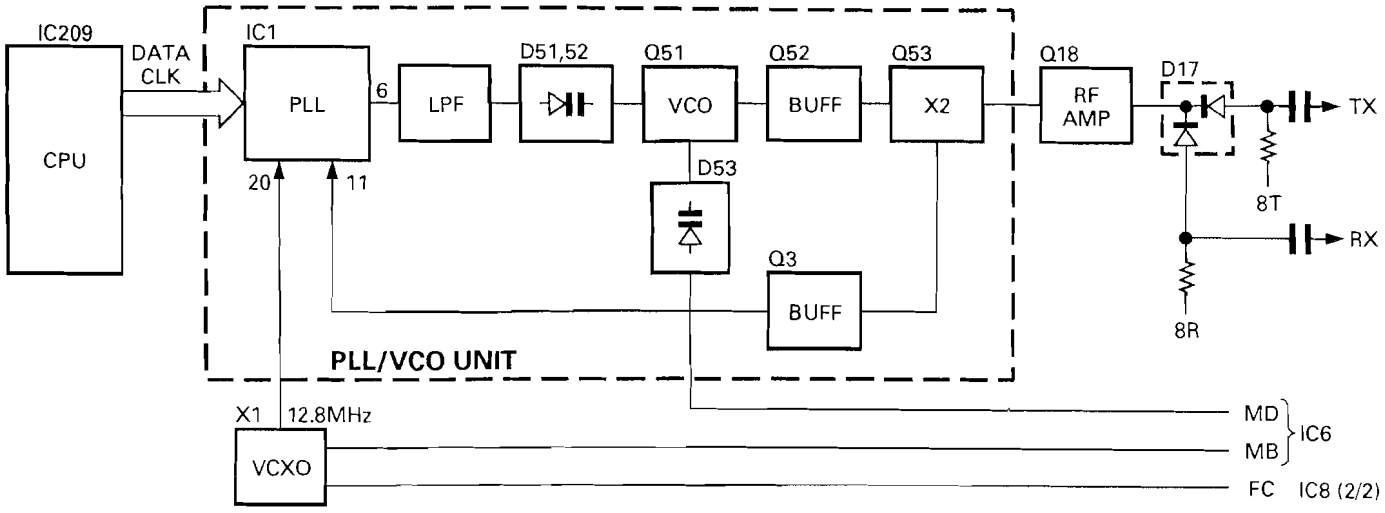

Fig. 5 PLL unit block diagram

5-2. PLL unlock

When the PLL is unlocked, the lock detect signal (LD) of the PLL IC (IC1) is rectified by D1 and Q2, and converted to a DC signal. This signal cuts off the power to the RF switch (D17) and drive module (IC12), stopping unnecessary transmission.

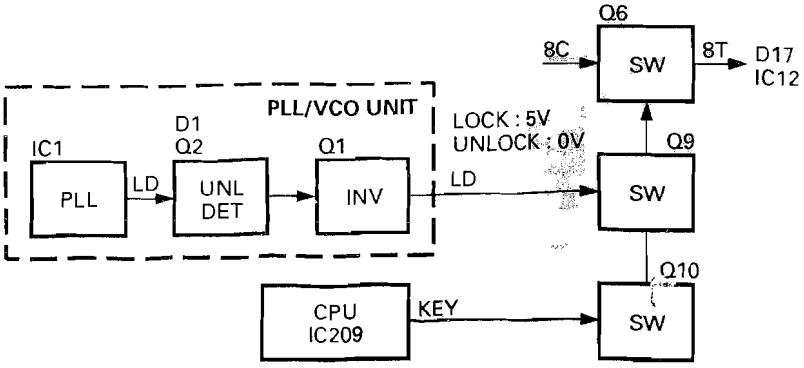

Fig. 6 PLL unlock circuit

CIRCUIT DESCRIPTION

6. Control unit

The control unit consists of CPU)IC209) and its peripheral circuits. It controls the TX and RX units and transfers data to and from the LCD assembly. The CPU has the following main functions:

1) Switching between transmission and reception according to the PTT signal input.
2) Reading system, group, frequency, and program data from the memory circuit.
3) Sending frequency data to the PLL.
4) Turning the squelch on and off according to the pulse signal input from the squelch circuit.
5) Controlling the audio mute circuit according to input decode data.
6) Sending encode data
7) Sending data to the D/A converter.

6-1. Memory circuit

IC201 is a 2-Kbit EEPROM that stores adjustment and backup data. IC207 is a 256-Kbit flash memory that contains the transceiver control program, and channel and operating feature data. The program and data can be easily written into the memory from external equipment. IC208 and IC210 control the writing of data into IC207.

- **Shift register**

IC10 is an interface IC for I/O port expansion. It is used to expand the CPU (IC209) output ports.

- **D/A converter**

IC6 is used as a conventional semi-fixed-resistor converter It sets the following:

1) Reference oscillator frequency
2) Transmission power
3) Modulation level
4) Audio power

6-2. TX encode data

The CPU (IC209) transmits encode data.

- **QT, DQT, LTR**

These data items are output from CPU pin 33. The signal from this pin passes through the CR low-pass filter and goes to the summing amplifier (IC212) in the microphone amplifier. It is mixed with the audio signal and output to the splatter filter. It then goes to the D/A converter (IC6) and on to the VCXO and VCO.

6-3. RX decode data

- **Low-speed data (QT, DQT, LTR)**

The receive detection signal is amplified by IC2 (2/2), and passes through a low-pass filter IC204 (1/2) to remove audio components. This signal is input to pin 27 of the CPU.

The CPU digitizes this signal, performs processing such as DC restoration, and decodes the signal.

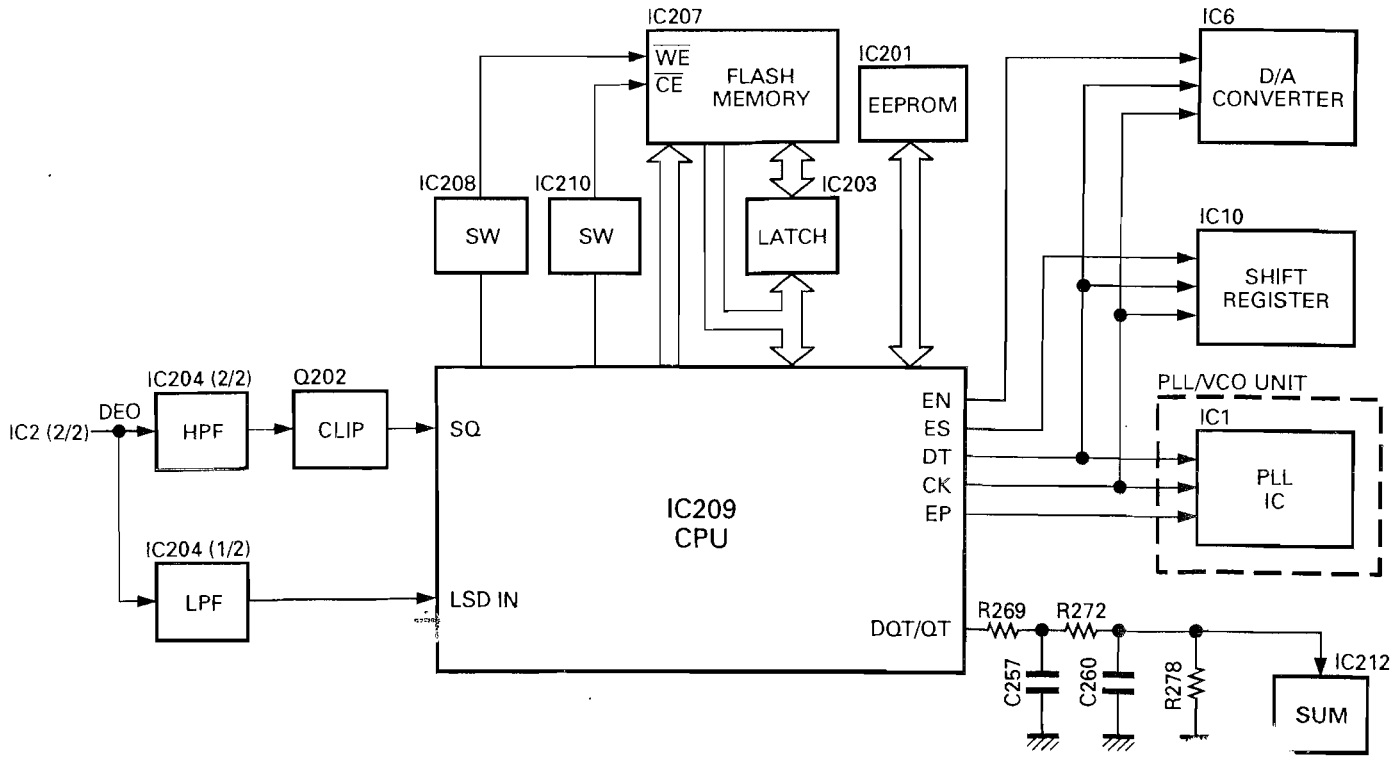

Fig. 7 Control unit block diagram

CIRCUIT DESCRIPTION

6-4. PLL data output

PLL data is output from DATA (pin 61), ENABLE (pin 59), and CLOCK (pin 60) of the CPU (IC209). The signals are input to the PLL IC (IC1) when the channel is changed or when transmission is changed to reception and vice versa.

6-5. Horn control

The horn switch, consisting of Q13, Q14, and Q29, controls the horn relay. It is supplied by the dealer to provide the external horn alert function.

Q29 disables horn alert, turning on when its base is high, to inhibit the function. Normally, the output from IC10 is low, and Q13 is off; the base of Q14 is about 0V and Q14 is off. When horn alert is enabled, the output from IC10 goes high and Q13 turns on. The base current flows through R61 to Q14 to turn Q14 on. Q14 can sink a minimum of 800mA.

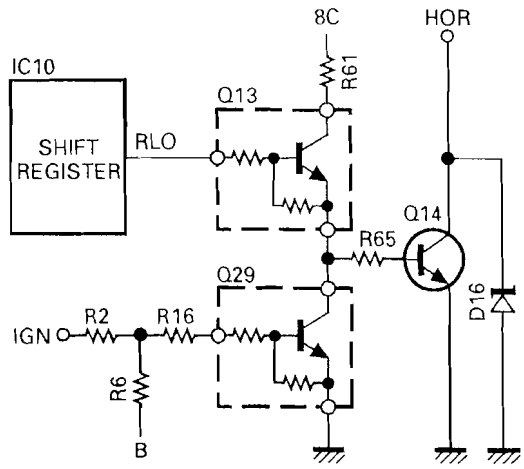

Fig. 8 Horn control circuit

6-6. Power supply circuit

D8 protects IC1 against overvoltage. Each time a pulse comes from the PSW terminal, the IC1 output is reversed. The reversed output signal passes through Q1 and Q3 and drives Q4. A voltage must be applied to the IGN terminal.

If 24V is supplied to the transceiver by mistake, Q2 turns on, and Q3 and Q4 are forced off, so the transceiver does not turn on.

If the SB terminal of the modular jack to which the microphone is connected is shorted or an overcurrent flows, R122 and R123 convert the current to a voltage and Q30 turns on. Its output drives Q28 and turns Q27 on, and the IC1 output foes high. This turns the transceiver off. If the terminal is no longer shorted, the transceiver can be turned on by pressing the power key. R125 and C161 are used to prevent malfunctioning when a device with a large surge current is connected.

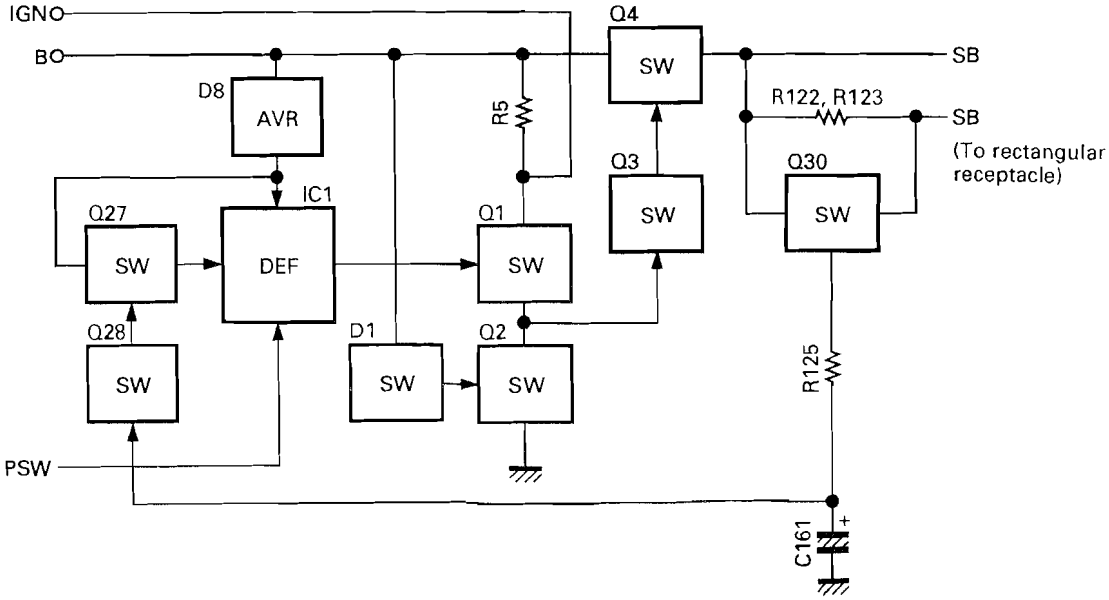

Fig. 9 Power supply circuit

CIRCUIT DESCRIPTION

7. LCD Assembly

The LCD assembly consists of CPU, LCD, power switch circuit, and tone generator.

7-1. CPU

The CPU (IC2) carries out the following main operations:

It sends on/off data serially to the control unit from the AF volume control, UP/DOWN key, system UP/DOWN key, group UP/DOWN key, SCAN key, and AUX key. It receives serial data from the control unit and displays it on the LCD.

The LCD can indicate alphanumeric characters (13 segments, 8 digits), TX, BUSY, CALL, SCAN, Talk-around, Option, AUX, TEL, and Delete.

7-2. Power switch circuit

Each time the power key is pressed, a pulse is sent to the TX-RX unit to turn the transceiver on or off.

7-3. Tone generator

The beeps and alert tones are generated by combining square wave signals of about 700Hz, 900Hz, and 1500Hz generated by the CPU These signals are output from pins 46, 47, and 48 of the CPU (IC2). The signals are rectified by a CR network and fed to the TX-RX unit LCD assembly and the de-emphasis circuit of IC9 (2/2).

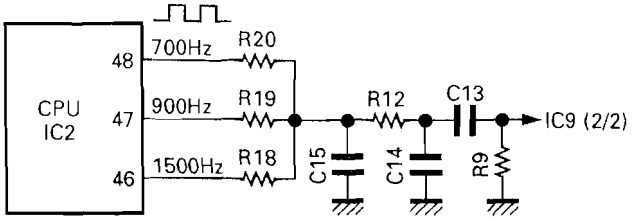

Fig. 10 Tone generator circuit

SEMICONDUCTOR DATA

Level Adjuster : M62363FP (TX-RX Unit IC6)

- **Block diagram**

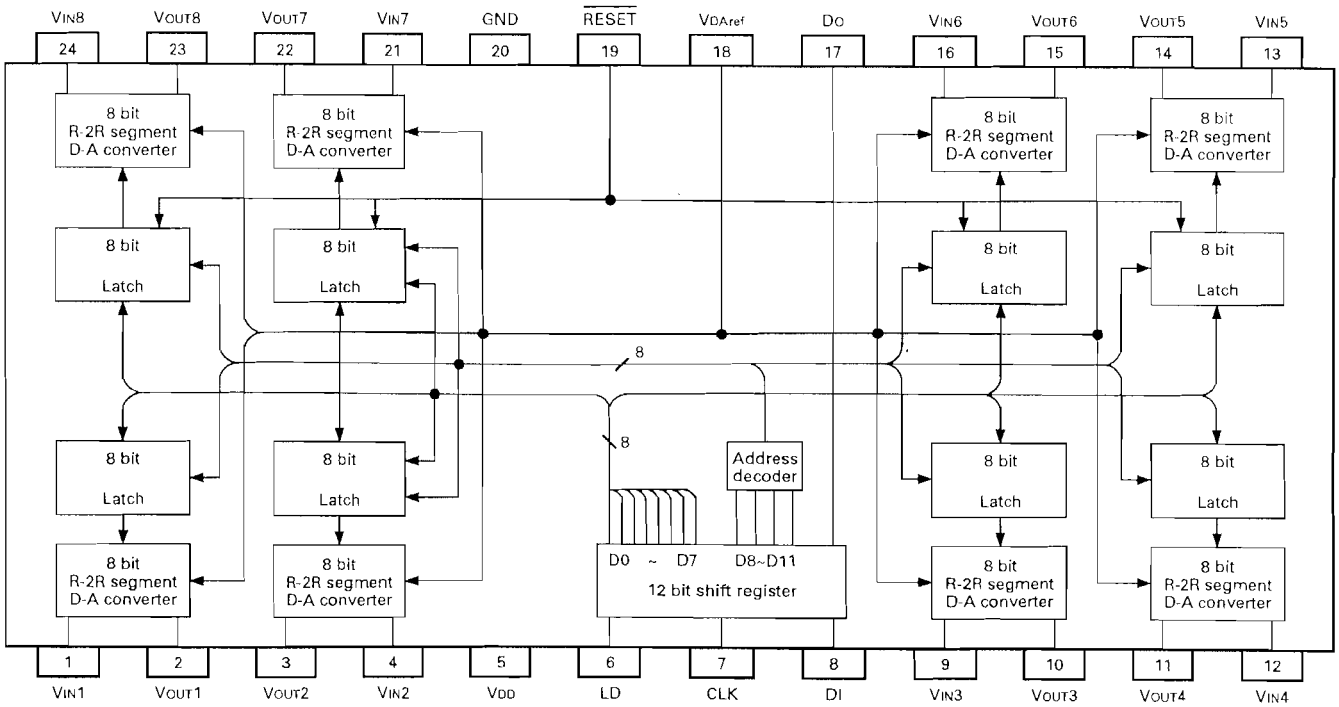

Audio Power Amplifier : LA4422 (TX-RX Unit IC11)

- **Terminal connection diagram**

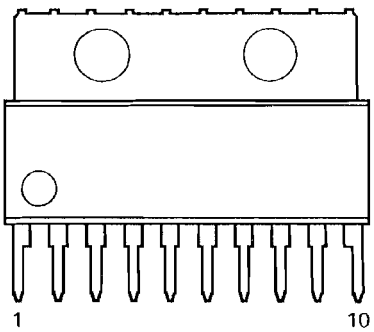

- **Block diagram**

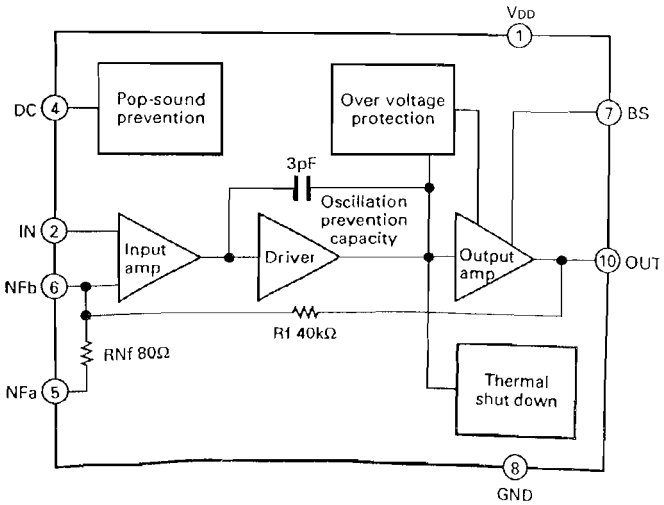

SEMICONDUCTOR DATA

EEPROM : AT24C02N10SI2.7 (TX-RX Unit IC201)

- **Terminal connection diagram**

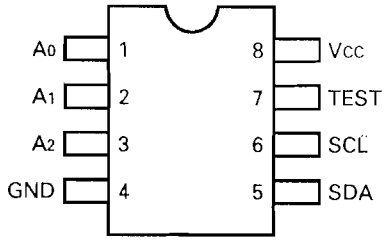

- **Terminal function**

Pin name	Function
A0~A2	Address input
SDA	Serial data
SCL	Serial clock
TEST	Test input → Ground (GND)
NC	No connect

- **Block diagram**

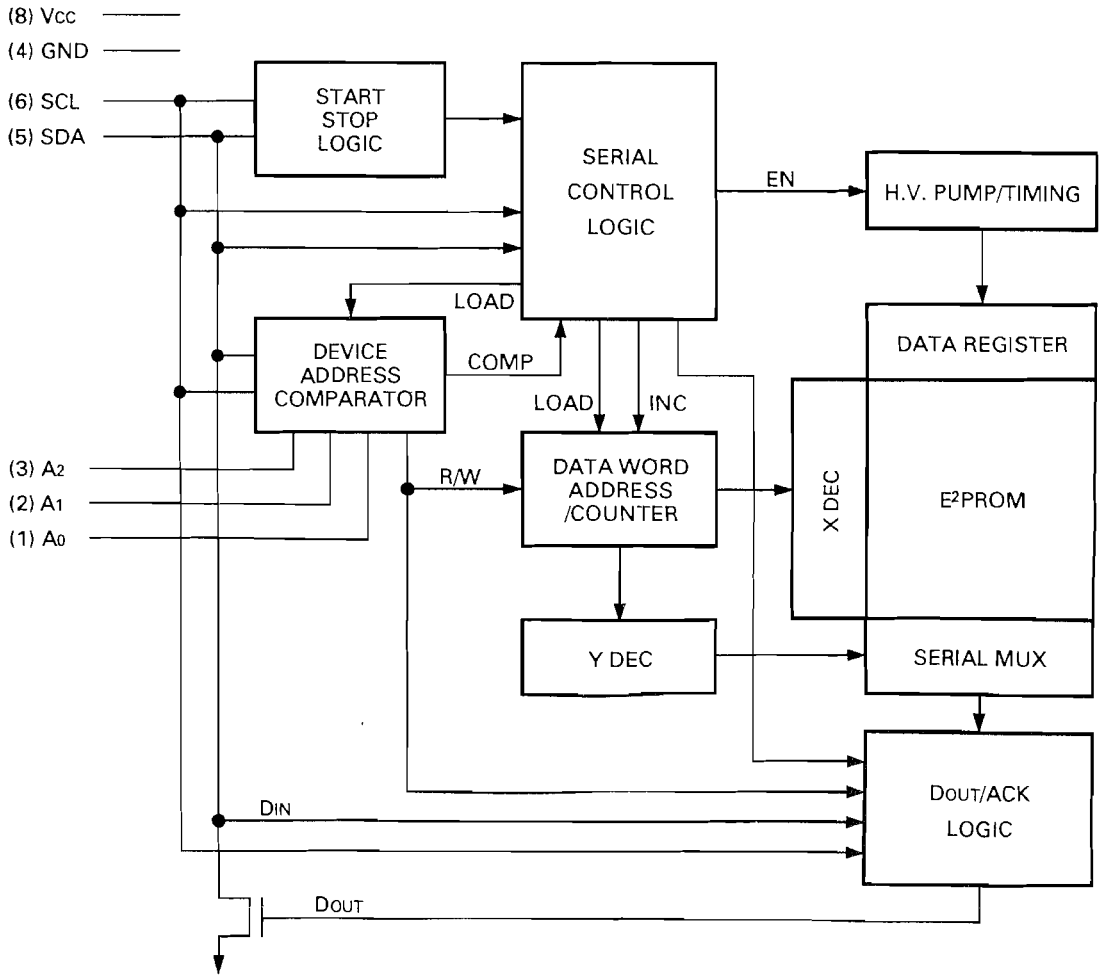

SEMICONDUCTOR DATA

Microprocessor : 78312AGF3563BE (TX-RX Unit IC209)

- **Terminal connection diagram**

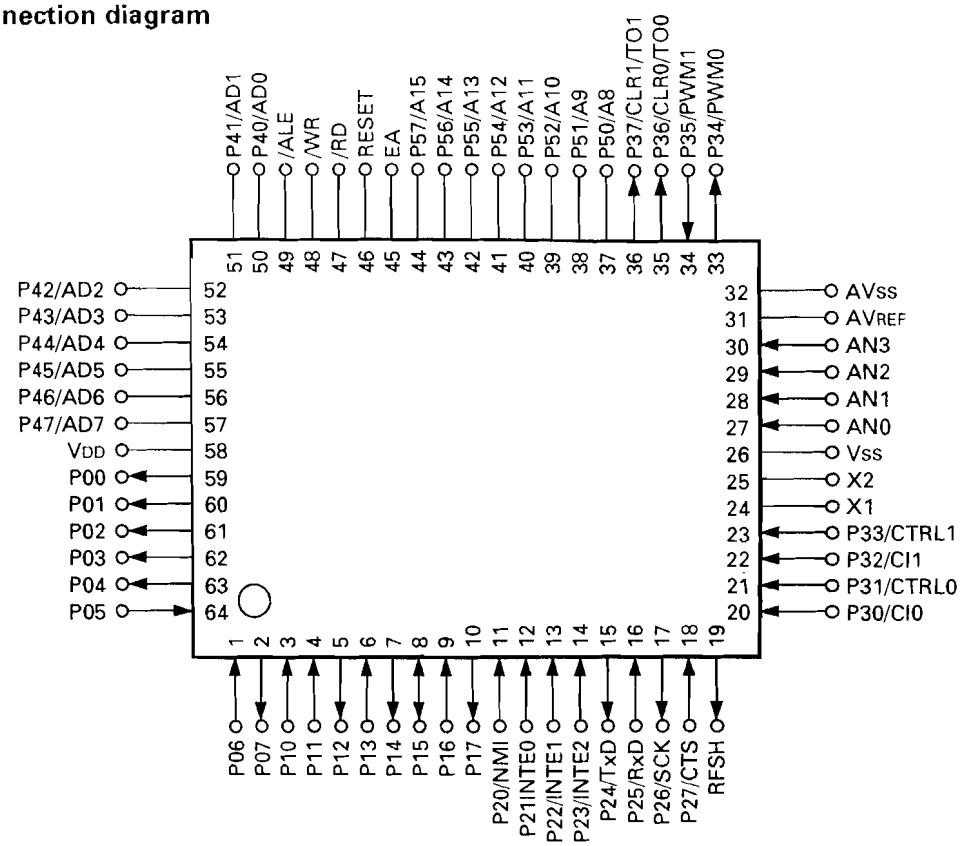

- **Terminal function**

Pin No.	Pin Name	I/O	Function	Pin No.	Pin Name	I/O	Function
1	P06	I	Option signaling transpond PTT.	26	Vss	–	GND.
2	P07	O	D-A converter enable.	27	AN0	I	Low speed data input.
3	P10	I	External PTT.	28	AN1	I	Not use.
4	P11	I	External HOOK.	29	AN2	I	800/900MHz band input.
5	P12	O	Option signaling reset.	30	AN3	I	+5V.
6	P13	I	Not use.	31	AVREF	–	+5V.
7	P14	O	Data output with clone.	32	AVss	–	GND.
8	P15	I/O	PTT/data output with programming.	33	P34/PWM0	O	Low speed data (Signaling) output.
9	P16	I	Data group control input (MDT).	34	P35/PWM1	I	Not use.
10	P17	O	KEY (Transmit : Active "H").	35	P36/CLR0/TO0	O	EEPROM data output.
11	P20/NMI	I	GND.	36	P37/CLR1/TO1	O	Flash memory write protect.
12	P21/INTE0	I	For display serial (RX) data input.	37~44	P50/A8~P57/A15	–	A8~A15 (Bus).
13	P22/INTE1	I	HOOK/data input with programming.	45	EA	–	External access.
14	P23/INTE2	I	Data input with clone.	46	RESET	–	Power on reset.
15	P24/TXD	O	External (TX) data output.	47	/RD	–	Read (Bus).
16	P25/RXD	I	External (RX) data output.	48	/WR	–	Write (Bus).
17	P26/SCK	O	Microphone mute (When receive/link).	49	/ALE	–	Address latch.
18	P27/CTS	I	GND.	50~57	P40/AD0~P47/AD7	–	AD0~AD7 (Bus).
19	RFSH	O	Not use.	58	VDD	–	+5V.
20	P30/CI0	I	Noise pulse input.	59	P00	O	PLL data enable.
21	P31/CTRL0	I	Not use.	60	P01	O	PLL/EEPROM/Shift register/D-A converter clock.
22	P32/CI1	I	Unlock signal input.	61	P02	O	PLL/shift register/D-A converter data.
23	P33/CTRL1	I	Option signaling decode latch.	62	P03	O	Shift register enable.
24	X1	–	12.000MHz.	63	P04	O	For display serial (TX) data output.
25	X2	–	12.000MHz.	64	P05	I	Option signaling deadbeat disable.

SEMICONDUCTOR DATA

Microprocessor : 75308BGK740BE9 (LCD Assy IC2)

- **Terminal connection diagram**

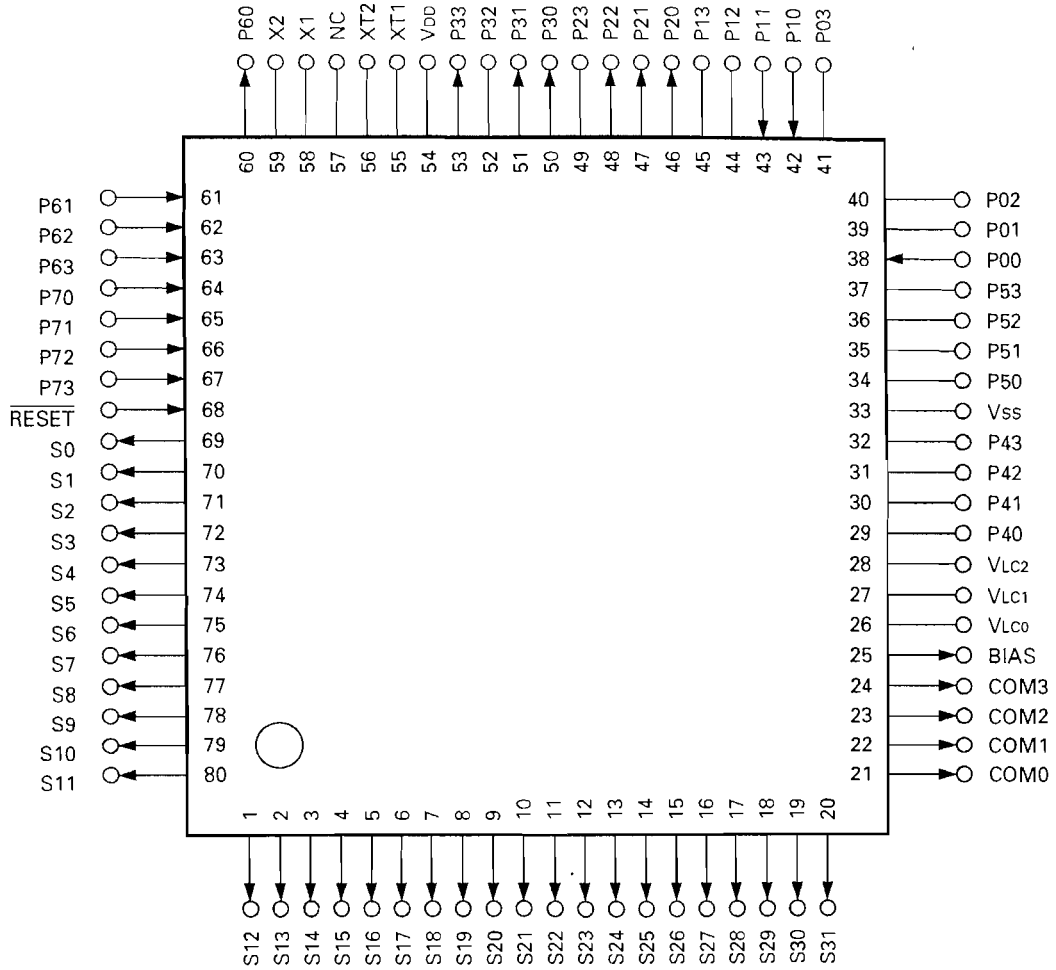

- **Terminal function**

Pin No.	Pin Name	I/O	Function	Pin No.	Pin Name	I/O	Function
1~20	S12~S31	O	LCD output (S20~S1).	52	P32	–	Open (not use).
21~24	COM0~COM3	O	LCD COM0~COM3 output.	53	P33	O	Serial data output.
25	BIAS	O	LCD power supply voltage.	54	VDD	–	+5V.
26~28	VLC0~VLC2	–	LCD voltage level generator.	55	XT1	–	+5V.
29~32	P40~P43	–	Open (not use).	56	XT2	–	Open (not use).
33	VSS	–	GND.	57	NC	–	Open (not use).
34~37	P50~P53	–	Open (not use).	58, 59	X1, X2	–	System clock input.
38	P00	I	HOOK (PC) serial data input.	60	P60	I	AUX switch input.
39~41	P01~P03	–	Open (not use).	61	P61	I	SCAN switch input.
42	P10	I	Serial data input.	62	P62	I	Volume up switch input.
43	P11	I	PTT (PC) serial data input.	63	P63	I	Volume down switch input.
45, 45	P12, P13	–	Open (not use).	64	P70	I	Group up switch input.
46	P20	O	Beep output (Hi).	65	P71	I	Group down switch input.
47	P21	O	Beep output (Med).	66	P72	I	System up switch input.
48	P22	O	Beep output (Lo).	67	P73	I	System down switch input.
49	P23	–	Open (not use).	68	RESET	I	System reset input.
50	P30	O	PTT (PC) serial data output.	69~80	S0~S11	O	LCD output (S32~S21).
51	P31	O	HOOK (PC) serial data output.				

SEMICONDUCTOR DATA

PLL System : SC370651F or MC145190F-K (PLL/VCO IC1)

- **Terminal connection diagram**

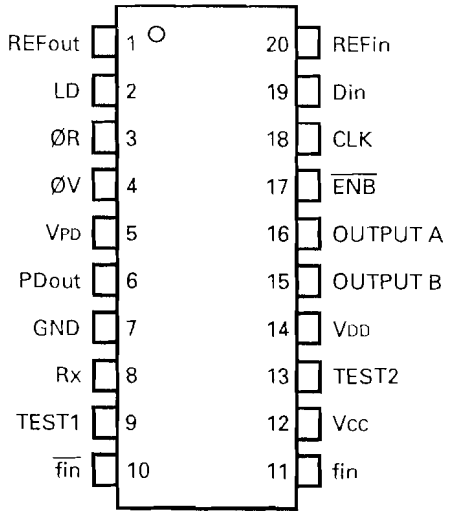

- **Block diagram**

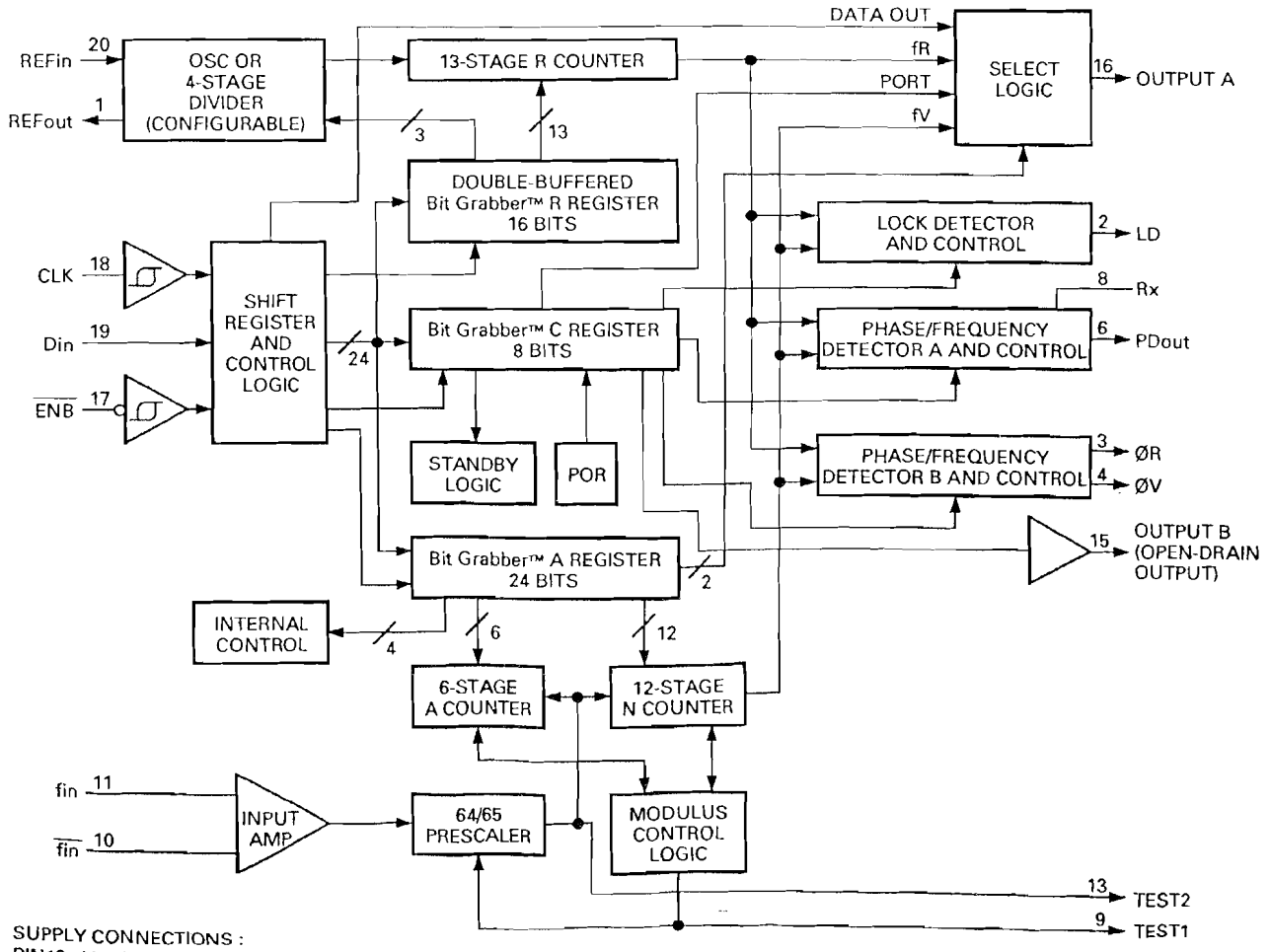

SUPPLY CONNECTIONS :
PIN12= Vcc (V+TO INPUT AMP AND 64/65 PRESCALER)
PIN5 = VPD (V+TO PHASE/FREQUENCY [illegible] TORS A AND B)
PIN14= VDD (V+TO BALANCE OF CI[illegible]
PIN7 = GND (COMMON GROUND)

DESCRIPTION OF COMPONENTS

TX-RX UNIT (X57-4590-XX) -10 : TK-940 -11 : TK-941

Ref. No.	Parts No.	Use/Function	Operation/Condition
IC1	BU4013BF	Power supply circuit logic control	
IC2	NJM4558E	Audio amplifier (Detected output)	
IC3	NJM78L05UA	Voltage regualtor	5V.
IC4	µPC7808H	Voltage regulator	8V.
IC5	NJM4558E	Active filter	
IC6	M62363FP	Level adjuster	
IC7	MC3372V	IF system	1st IF 45.0375MHz (TK-940), 39 0375MHz (TK-941), 2nd IF . 455kHz
IC8	NJM4558E	Buffer amplifier	
IC9	NJM4558E	Active filter	
IC10	XRU4094BCF	I/O port expansion	Or BU4094BCF.
IC11	LA4422	Audio power amplifier	
IC13	NJM2904M	Comparator, DC amplifier	
IC201	AT24C02N10SI2.7	EEPROM	Capacity 2-Kbit.
IC202	NJM78L05UA	Voltage regulator	5V.
IC203	HD74HC373FP	Latch	
IC204	NJM4558E	Active filter, Hysteresis comparator	
IC205	NJM4558E	Active filter, Limiter	
IC206	S-8054ALB-LM-T1	Precision reference	
IC207	AT29C256-20TI	Flash memory	
IC208	TC7S32F	DC switch	"L" when IC207 access.
IC209	78312AGF3563BE	Microprocessor	
IC210	TC7S04F	DC switch	"L" when writing program or data from external equipment.
IC211	NJM4558E	Active filter	
IC212	TA75S01F	Adder	
Q1	DTA114EU	DC switch	On when power switch on.
Q2	DTC114EU	DC switch	On when 24V connected, then Q3 turn off.
Q3	DTC114EU	DC switch	On when power switch on.
Q4	2SA1641(S,T)	DC switch	On when power switch on.
Q5	DTA114YU	DC switch	Oh when power switch off, then D22 turn on.
Q6, 7	2SB1188(Q,R)	DC switch	RX . 0V, TX : 8V
Q8	2SA1362(Y)	DC switch	RX : 8V, TX : 0V
Q9	DTC114EU	DC switch	On when PLL lock.
Q10	DTC114EU	DC switch	On when PTT switch on.
Q11	DTC114EU	DC switch	On when RX.
Q12	DTC114EU	DC switch	On when TX.
Q13	DTC114EU	DC switch	On when horn control on.
Q14	2SD1624(S)	DC switch	On when horn control on.
Q15	2SC4116(GR)	Ripple filter	
Q16	2SC4215(Y)	RX 1st IF amplifier	45.0375MHz (TK-940), 39.0375MHz (TK-941)
Q17	DTA114TU	Muting switch	On when no beep sound at busy.
Q18	2SC4226(R24)	RF amplifier	
Q19	DTC144EU	DC switch	On when no beep sound at busy.
Q20	DTC314TK	Muting switch	Off when busy.
Q21	3SK241(R)	RX 1st mixer	
Q22	2SB1370(E,F)	APC driver	
Q23	2SC4116(GR)	DC amplifier	APC controller.
Q24	2SC4094(R37)	RF amplifier	
Q25	DTA144EU	DC switch	On when PTT switch on.
Q26	DTC144EU	DC switch	On when PTT switch on.
Q27	DTA114YU	DC switch	On when modular jack SB terminal shorted.
Q28	DTC114YU	DC switch	On when modular jack SB terminal shorted.
Q29	DTC114EU	DC switch	On when IGN line "H".
Q30	2SA1586(Y,GR)	DC switch	On when modular jack SB terminal shorted.

DESCRIPTION OF COMPONENTS

Ref. No.	Parts No.	Use/Function	Operation/Condition
Q201	DTC114EU	Muting switch	Off when TX.
Q202	DTC144EU	DC switch	On/off by noise.
D1	02CZ18(X,Y)	Voltage reference	
D2	DSA3A1	Protection	On when reverse connection.
D4	1SS301	Reverse current prevention	
D7	DA204K	Surge absorption	On when 5V or more and 0V or less.
D8	02CZ15(X,Y)	Voltage reference	
D9, 10	DA204K	Surge absorption	On when 5V or more and 0V or less.
D11	1SS301	Reverse current prevention	
D12~15	DA204K	Surge absorption	On when 5V or more and 0V or less.
D16	02CZ20(Y,Z)	Voltage reference	
D17	DAN235K	RF switch	
D18	HSM88AS	Large input protection	
D19	MI809	TX/RX switch	On when TX.
D20	MA4P1250	TX/RX switch	On when TX.
D21	MI809	TX/RX switch	On when TX.
D22	MA77	DC switch	On when power switch off.
D201, 202	DA204K	Surge absorption	On when 5V or more and 0V or less.
D203	1SS301	DC switch	On when microphone mute on.

PLL/VCO (X58-4170-XX) -10 : TK-940 -11 : TK-941

Ref. No.	Parts No.	Use/Function	Operation/Condition
IC1	SC370651F	PLL system	Or MC145190F-K.
Q1	DTC143EK	Lock detection switch	On when PLL unlocked.
Q2	2SA1586(Y,GR)	Lock detection switch	On when PLL unlocked.
Q3	2SC3356	Buffer amplifier	
Q51	2SK508NV(K52)	Oscillator	
Q52	2SC3356	Buffer amplifier	
Q53	2SC3356	Doubler	
D1	1SS301	DC switch	On when PLL unlocked.
D51, 52	1T363A	Variable diode	Frequency control.
D53	MA360	Modulator	

LCD ASSY (B38-0731-05)

Ref. No.	Parts No.	Use/Function	Operation/Condition
IC1	NJM78L05UA	Voltage regulator	5V.
IC2	75308BGK740BE9	Microprocessor	
ED1	B38-0722-05	LCD	

PARTS LIST

CAPACITORS

CC 45 TH 1H 220 J
1 2 3 4 5 6

1 = Type ... ceramic, electrolytic, etc.
2 = Shape ... round, square, ect.
3 = Temp. coefficient
4 = Voltage rating
5 = Value
6 = Tolerance

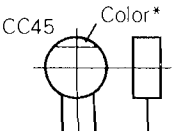

• Capacitor value

010 = 1pF
100 = 10pF
101 = 100pF
102 = 1000pF = 0.001μF
103 = 0.01μF

2 2 0 = 22pF
Multiplier
2nd number
1st number

• Temperature coefficient

1st Word	C	L	P	R	S	T	U
Color*	Black	Red	Orange	Yellow	Green	Blue	Violet
ppm/°C	0	−80	−150	−220	−330	−470	−750

2nd Word	G	H	J	K	L
ppm/°C	±30	±60	±120	±250	±500

Example : CC45TH = −470 ± 60ppm/°C

• Tolerance

Code	C	D	G	J	K	M	X	Z	P	No code
(%)	±0.25	±0.5	±2	±5	±10	±20	+40 −20	+80 −20	+100 −0	More than 10μF − 10 ~ +50 Less than 4.7μF −10 ~ +75

Less than 10pF

Code	B	C	D	F	G
(pF)	±0.1	±0.25	±0.5	±1	±2

• Voltage rating

1st word \ 2nd word	A	B	C	D	E	F	G	H	J	K	V
0	1.0	1.25	1.6	2.0	2.5	3.15	4.0	5.0	6.3	8.0	–
1	10	12.5	16	20	25	31.5	40	50	63	80	35
2	100	125	160	200	250	315	400	500	630	800	–
3	1000	1250	1600	2000	2500	3150	4000	5000	6300	8000	–

• Chip capacitors (Refer to the table above except dimension)

(EX) CC 73 F SL 1H 000 J
1 2 3 4 5 6 7
(Chip) (CH, RH, UJ, SL)

(EX) CK 73 F F 1H 000 Z
1 2 3 4 5 6 7
(Chip) (B, F)

RESISTORS

• Chip resistor (Carbon)

(EX) RD 73 E B 2B 000 J
1 2 3 4 5 6 7
(Chip) (B,F)

• Carbon resistor (Normal type)

(EX) RD 14 B B 2C 000 J
1 2 3 4 5 6 7

1 = Type ... ceramic, electrolytic, etc.
2 = Shape ... round, square, ect.
3 = Dimension
4 = Temp. coefficient
5 = Voltage rating
6 = Value
7 = Tolerance

Dimension

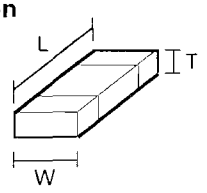

• Dimension (Chip capacitor)

Dimension code	L	W	T
Empty	5.6 ± 0.5	5.0 ± 0.5	Less than 2.0
E	3.2 ± 0.2	1.6 ± 0.2	Less than 1.25
F	2.0 ± 0.3	1.25 ± 0.2	Less than 1.25

• Dimension (Chip resistor)

Dimension code	L	W	T	Wattage
E	3.2 ± 0.2	1.6 ± 0.2	0.57	2B
F	2.0 ± 0.3	1.25 ± 0.2	0.45	2A

Rating wattage

Code	Wattage	Code	Wattage	Code	Wattage
2A	1/10W	2E	1/4W	3A	1W
2B	1/8W	2H	1/2W	3D	2W
2C	1/6W				

PARTS LIST

× New Parts
Parts without Parts No. are not supplied.
Les articles non mentionnes dans le Parts No. ne sont pas fournis.
Teile ohne Parts No. werden nicht geliefert.

TK-940/941

Ref. No. 参照番号	Address 位置	New Parts 新	Parts No. 部品番号	Description 部品名／規格	Destination 仕向	Remarks 備考
			TK-940/941			
1	1B		A01-1065-03	METALLIC CABINET(UPPER)		
2	2B		A01-1066-03	METALLIC CABINET(LOWER)		
3	1C	*	A10-1344-01	CHASSIS		
4	2A	*	A62-0349-03	PANEL ASSY		
5	2E	*	B09-0235-05	CAP :ACSY		
6	2A	*	B38-0731-05	LCD ASSY		
7	1B,1C		B42-2455-04	LABEL (M4x8 MAX)		
8	1C		B42-3343-04	LABEL (S/NO)		
9	1C		B42-3394-14	LABEL		
10	3E		B42-5526-04	LABEL (HYATT)		
11	1E		B46-0409-40	WARRANTY CARD		
12	1E	*	B62-0459-00	INSTRUCTION MANUAL		
13	1C	*	B72-0705-04	MODEL NAME PLATE	940	
13	1C	*	B72-0752-04	MODEL NAME PLATE	941	
14	1D		E30-2036-05	GROUND LEAD WIRE :ACSY		
15	2E		E30-2076-15	DC CORD :ACSY		
16	1E		E30-2089-08	CURL CORD(FOR MIC) :ACSY		
W3	1C		E30-2172-15	DC CORD ASSY		
W1	1C		E30-3031-15	ANT CABLE ASSY		
W301	2B	*	E37-0460-05	FLAT CABLE(DISPLY-CONT UNIT)		
W2	1C	*	E37-0461-05	LEAD WIRE WITH CONNECTOR(SP:2P)		
W201	2B	*	E37-0470-05	FLAT CABLE(CONT-TXRX UNIT)		
700	1B	*	F10-2125-04	SHIELDING PLATE(PLL)		
701	2B	*	F10-2126-03	SHIELDING COVER(PLL)		
22	2E		F51-0016-05	FUSE (10A) :ACSY		
-	2E		F51-0016-05	FUSE (10A)···2pcs(DC CORD)		
24	1B		G02-0576-14	FLAT SPRING (AF IC)		
25	1B		G02-0711-04	FLAT SPRING (APC/AVR)		
26	1B,2C	*	G10-0764-04	FIBROUS SHEET(CHASSIS)		
27	2B	*	G10-0765-04	FIBROUS SHEET(CHASSIS)		
28	2B	*	G11-0728-04	SHEET (MODULAR JACK)		
29	1C	*	G13-1468-04	CUSHION (DC CORD)		
702	2B		G13-0921-04	CUSHION (LCD ASSY)		
30	2B	*	G53-0776-04	PACKING (PHONE JACK)		
31	2D	*	H10-2784-02	POLYSTYRENE FOAMED FIXTURE		
32	3E	*	H10-2785-02	POLYSTYRENE FOAMED FIXTURE		
33	2D	*	H12-1469-02	PACKING FIXTURE		
34	1D	*	H13-0942-04	CARTON BOARD		
35	2E		H25-0029-04	BAG (60x110)		
36	3E		H25-0049-03	BAG		
37	2E		H25-0103-04	BAG (125x250)		
38	2D	*	H25-0796-04	BAG		
39	3D	*	H52-0603-04	ITEM CARTON CASE	940	
39	3D	*	H52-0610-04	ITEM CARTON CASE	941	
40	2E		J19-1376-15	MIC HANGER :ACSY		
41	1C		J19-1434-04	HOLDER(SP)		
42	1D		J29-0441-03	BRACKET :ACSY		
43	2A	*	K29-4928-02	KEY TOP		
A	2B		N09-2077-05	SEMS SCREW(FINAL MODULE)		
B	1C,2C		N33-2606-45	OVAL HEAD MACHIN SCREW(CASE)		
C	1B,1C		N83-2606-46	PAN HEAD TAPTITE SCREW		

L:Scandinavia **K:**USA **P:**Canada
Y:PX(Far East, Hawaii) **T:**England **E:**Europe
Y:AAFES(Europe) **X:**Australia **M:**Other Areas

⚠ indicates safety critical components.

PARTS LIST

* New Parts
Parts without Parts No. are not supplied.
Les articles non mentionnes dans le Parts No. ne sont pas fournis
Teile ohne Parts No. werden nicht geliefert.

TK-940/941
TX-RX UNIT (X57-4590-XX)

Ref. No. 参照番号	Address 位置	New Parts 新	Parts No. 部品番号	Description 部品名／規格	Destination 仕向	Remarks 備考
D	2B,1C		N87-2608-46	BRAZIER HEAD TAPTITE SCREW		
E	2A		N88-2606-46	FLAT HEAD TAPTITE SCREW(PANNEL)		
45	2E		N99-0321-05	SCREW SET :ACSY		
46	1C		212-2013-05	INSULATING TUBE (ANT CABLE)		
SP	1C		T07-0246-05	SPEAKER (16 OHM 1W)		
MIC	1D		T91-0362-15	MICROPHONE :ACSY		
IC14	2C		MHW820-1	IC(POWER MODULE)··FINAL)	940	
IC14	2C		MHW820-3	IC(POWER MODULE)··FINAL)	941	
IC12	2C		M57775	IC(POWER MODULE)··DRIVE)	940	
IC12	2C		M57781	IC(POWER MODULE)··DRIVE)	941	
703	2B,2C	*	X57-4590-10	TX-RX UNIT (A/2,B/2)	940	
703	2B,2C	*	X57-4590-11	TX-RX UNIT (A/2,B/2)	941	
TX-RX UNIT (X57-4590-XX) -10 : TK-940 -11 : TK-941						
C1 ,2			CC73GCH1H101J	CHIP C 100PF J		
C3			CK73GB1H102K	CHIP C 1000PF K		
C4 -10			CC73GCH1H101J	CHIP C 100PF J		
C12 -16			CC73GCH1H101J	CHIP C 100PF J		
C17			CE04EW1E471M	ELECTRO 470UF 25WV		
C19			CK73GB1H471K	CHIP C 470PF K		
C20 ,21			CK73GB1H102K	CHIP C 1000PF K		
C23			C92-0004-05	CHIP TAN 1.0UF 16WV		
C24			C92-0036-05	ELECTRO 4.7UF 16WV		
C25			CK73GB1H471K	CHIP C 470PF K		
C26			CK73GB1H103K	CHIP C 0.01UF K		
C27			C92-0507-05	CHIP TAN 4.7UF 6.3WV		
C28			CK73GB1H471K	CHIP C 470PF K		
C29			C92-0004-05	CHIP TAN 1.0UF 16WV		
C30			CK73FB1E104K	CHIP C 0.10UF K		
C31			CK73GB1H103K	CHIP C 0.01UF K		
C32			CK73GB1H472K	CHIP C 4700PF K		
C33			CK73GB1H103K	CHIP C 0.01UF K		
C34			CK73GB1H102K	CHIP C 1000PF K		
C35			CK73GB1H103K	CHIP C 0.01UF K		
C37			CK73GB1H103K	CHIP C 0.01UF K		
C38			CC73GCH1H101J	CHIP C 100PF J		
C39			CK73GB1H103K	CHIP C 0.01UF K		
C41			C92-0507-05	CHIP TAN 4.7UF 6.3WV		
C42			C92-0543-05	CHIP TAN 3.3UF 10WV		
C43 ,44			C92-0507-05	CHIP TAN 4.7UF 6.3WV		
C45			CC73GCH1H101J	CHIP C 100PF J		
C46			CK73GB1H102K	CHIP C 1000PF K		
C47			CK73FF1C105Z	CHIP C 1.0UF Z		
C48			CK73FB1E104K	CHIP C 0.10UF K		
C49			CK73GB1H682K	CHIP C 6800PF K		
C50			CK73FB1E104K	CHIP C 0.10UF K		
C51			CK73GB1H102K	CHIP C 1000PF K		
C52			CK73GB1H682K	CHIP C 6800PF K		
C53			C92-0543-05	CHIP TAN 3.3UF 10WV		
C54 ,55			CC73GCH1H270J	CHIP C 27PF J		
C56			CK73GB1H682K	CHIP C 6800PF K		
C57			CC73GCH1H100D	CHIP C 10PF D		
C58			CK73GB1H103K	CHIP C 0.01UF K		
C59 ,60			CC73GCH1H221J	CHIP C 220PF J		
C61			C92-0041-05	ELECTRO 10UF 10WV		

L:Scandinavia K:USA P:Canada
Y:PX(Far East, Hawaii) T:England E:Europe
Y:AAFES(Europe) X:Australia M:Other Areas

⚠ indicates safety critical components.

PARTS LIST

* New Parts
Parts without Parts No. are not supplied.
Les articles non mentionnes dans le Parts No. ne sont pas fournis.
Teile ohne Parts No. werden nicht geliefert

TX-RX UNIT (X57-4590-XX)

Ref. No. 参照番号	Address 位置	New Parts 新	Parts No. 部品番号	Description 部品名／規格			Destination 仕向	Remarks 備考
C62			CK73GB1H103K	CHIP C	0.01UF	K		
C63			CK73GB1H102K	CHIP C	1000PF	K		
C64			CK73GB1H103K	CHIP C	0.01UF	K		
C65			CC73GCH1H101J	CHIP C	100PF	J		
C66			CK73GB1H102K	CHIP C	1000PF	K		
C67			C92-0546-05	CHIP TAN	68UF	6.3WV		
C68 ,69			CK73GB1H103K	CHIP C	0.01UF	K		
C70			CK73GB1H102K	CHIP C	1000PF	K		
C71		*	C92-0044-05	ELECTRO	47UF	10WV		
C72			CC73GCH1H101J	CHIP C	100PF	J		
C73			CK73GB1H102K	CHIP C	1000PF	K		
C74		*	C92-0044-05	ELECTRO	47UF	10WV		
C75			C92-0004-05	CHIP TAN	1.0UF	16WV		
C76 ,77			CK73GB1H103K	CHIP C	0.01UF	K		
C78			CK73FB1E104K	CHIP C	0.10UF	K		
C79			C92-0507-05	CHIP TAN	4.7UF	6.3WV		
C80			CK73GB1C104K	CHIP C	0.10UF	K		
C81			C92-0040-05	ELECTRO	47UF	16WV		
C82			CK73GB1H103K	CHIP C	0.01UF	K		
C83			CC73GCH1H030C	CHIP C	3PF	C		
C84 ,85			CK73GB1H102K	CHIP C	1000PF	K		
C86			CC73GCH1H101J	CHIP C	100PF	J		
C87			CC73GCH1H470J	CHIP C	47PF	J		
C88			CC73GCH1H080D	CHIP C	8PF	D	940	
C88			CC73GCH1H110J	CHIP C	11PF	J	941	
C89			CC73GCH1H470J	CHIP C	47PF	J		
C90			CC73GCH1H030C	CHIP C	3PF	C		
C91			CK73GB1H471K	CHIP C	470PF	K		
C92			CK73GB1H102K	CHIP C	1000PF	K		
C93			CK73FF1C105Z	CHIP C	1.0UF	Z		
C94			CC73GCH1H101J	CHIP C	100PF	J		
C95			CK73GB1H471K	CHIP C	470PF	K		
C96			CK73GB1H102K	CHIP C	1000PF	K		
C97		*	C92-0044-05	ELECTRO	47UF	10WV		
C98			CC73GCH1H101J	CHIP C	100PF	J		
C99		*	C92-0044-05	ELECTRO	47UF	10WV		
C101			CC73GCH1H101J	CHIP C	100PF	J		
C102			CK73GB1H103K	CHIP C	0.01UF	K		
C103			CC73GCH1H270J	CHIP C	27PF	J	940	
C103			CC73GCH1H330J	CHIP C	33PF	J	941	
C104			CC73GCH1H470J	CHIP C	47PF	J		
C105			CK73GB1H471K	CHIP C	470PF	K		
C107			CC73GCH1H101J	CHIP C	100PF	J		
C108			C92-0040-05	ELECTRO	47UF	16WV		
C109			CK73GB1H102K	CHIP C	1000PF	K		
C110			CE04EW1A471M	ELECTRO	470UF	10WV		
C111			CQ92M1H104K	MYLAR C	0.10UF	K		
C112			CC73GCH1HR75C	CHIP C	0.75PF	C		
C113,114			CK73GB1H102K	CHIP C	1000PF	K		
C115			CC73GCH1HR75C	CHIP C	0.75PF	C	940	
C115			CC73GCH1H010C	CHIP C	1PF	C	941	
C116			CC73GCH1H470J	CHIP C	47PF	J		
C117			CK73GB1H102K	CHIP C	1000PF	K		
C118			C92-0004-05	CHIP TAN	1.0UF	16WV		
C119			CK73GB1H102K	CHIP C	1000PF	K		

L:Scandinavia K:USA P:Canada
Y:PX(Far East, Hawaii) T:England E:Europe
Y:AAFES(Europe) X:Australia M:Other Areas

⚠ indicates safety critical components.

PARTS LIST

* New Parts
Parts without Parts No. are not supplied.
Les articles non mentionnes dans le Parts No. ne sont pas fournis
Teile ohne Parts No. werden nicht geliefert.

TX-RX UNIT (X57-4590-XX)

Ref No. 参照番号	Address 位置	New Parts 新	Parts No. 部品番号	Description 部品名／規格			Destination 仕向	Remarks 備考
C120			CC73GCH1H470J	CHIP C	47PF	J		
C121			CK73GB1H102K	CHIP C	1000PF	K		
C122			CC73GCH1H020C	CHIP C	2.0PF	C		
C123			CK73GB1H102K	CHIP C	1000PF	K		
C124			CC73GCH1H470J	CHIP C	47PF	J		
C125			C92-0040-05	ELECTRO	47UF	16WV		
C126			CK73GB1H102K	CHIP C	1000PF	K		
C127			CK73FB1H473K	CHIP C	0.047UF	K		
C128			CK73GB1H102K	CHIP C	1000PF	K		
C129			CC73GCH1H101J	CHIP C	100PF	J		
C130			C92-0040-05	ELECTRO	47UF	16WV		
C131			CK73GB1H102K	CHIP C	1000PF	K		
C132			CC73GCH1H101J	CHIP C	100PF	J		
C133			CK73GB1H102K	CHIP C	1000PF	K		
C134			CC73GCH1H470J	CHIP C	47PF	J		
C135			CK73GB1H103K	CHIP C	0.01UF	K		
C136			CC73GCH1H101J	CHIP C	100PF	J		
C137			C92-0040-05	ELECTRO	47UF	16WV		
C138,139			CK73GB1H102K	CHIP C	1000PF	K		
C140			CC73GCH1H030C	CHIP C	3PF	C		
C141			CC73GCH1H470J	CHIP C	47PF	J		
C142			CK73GB1H102K	CHIP C	1000PF	K		
C143			CK73FB1E104K	CHIP C	0.10UF	K		
C144			CC73GCH1H101J	CHIP C	100PF	J		
C145		*	C93-0550-05	FIXED C	1PF		941	
C145		*	C93-0552-05	FIXED C	2PF		940	
C146			CK73GB1H102K	CHIP C	1000PF	K		
C147			CC73GCH1H470J	CHIP C	47PF	J		
C148			CK73GB1H102K	CHIP C	1000PF	K		
C149		*	C93-0552-05	FIXED C	2PF		940	
C150,151			CC73GCH1H101J	CHIP C	100PF	J		
C152			CC73GCH1H010C	CHIP C	1PF	C	940	
C152			CC73GCH1H1R5C	CHIP C	1.5PF	C	941	
C153			CC73ECH1H470J	CHIP C	47PF	J		
C154			CK73EB1H102K	CHIP C	1000PF	K		
C155		*	C93-0556-05	FIXED C	6PF			
C156		*	C93-0552-05	FIXED C	2PF			
C157		*	C93-0550-05	FIXED C	1PF			
C158			C92-0507-05	CHIP TAN	4.7UF	6.3WV		
C159			CC73FCH1H470J	CHIP C	47PF	J		
C160			CC73GCH1H101J	CHIP C	100PF	J		
C161			C92-0004-05	CHIP TAN	1.0UF	16WV		
C162			CK73FB1E104K	CHIP C	0.10UF	K		
C163			CK73GB1H103K	CHIP C	0.01UF	K		
C201			CK73GB1H102K	CHIP C	1000PF	K		
C211			CC73GCH1H101J	CHIP C	100PF	J		
C213			CC73GCH1H101J	CHIP C	100PF	J		
C220-222			CC73GCH1H101J	CHIP C	100PF	J		
C224			CC73GCH1H101J	CHIP C	100PF	J		
C225			C92-0009-05	CHIP TAN	4.7UF	10WV		
C226			CK73GB1H103K	CHIP C	0.01UF	K		
C227,228			CC73GCH1H101J	CHIP C	100PF	J		
C229,230			CK73GB1H103K	CHIP C	0.01UF	K		
C231			C92-0507-05	CHIP TAN	4.7UF	6.3WV		
C232,233			CK73FB1E273K	CHIP C	0.027UF	K		

L:Scandinavia K:USA P:Canada
Y:PX(Far East, Hawaii) T:England E:Europe
Y:AAFES(Europe) X:Australia M:Other Areas

⚠ indicates safety critical components.

PARTS LIST

× New Parts
Parts without Parts No. are not supplied.
Les articles non mentionnes dans le Parts No. ne sont pas fournis
Teile ohne Parts No. werden nicht geliefert

TX-RX UNIT (X57-4590-XX)

Ref. No. 参照番号	Address 位置	New Parts 新	Parts No. 部品番号	Description 部品名／規格	Destination 仕向	Remarks 備考
C234			CK73GB1E223K	CHIP C 0.022UF K		
C235			CC73GCH1H101J	CHIP C 100PF J	940	
C235			CC73GCH1H330J	CHIP C 33PF J	941	
C236			CC73GCH1H101J	CHIP C 100PF J		
C237			CK73FB1E273K	CHIP C 0.027UF K		
C238			CK73GB1H222K	CHIP C 2200PF K		
C239			CK73GB1E223K	CHIP C 0.022UF K		
C240			C92-0507-05	CHIP TAN 4.7UF 6.3WV		
C241			CC73GCH1H470J	CHIP C 47PF J		
C242,243			CC73GCH1H101J	CHIP C 100PF J		
C244			CK73GB1E223K	CHIP C 0.022UF K		
C245			CC73GCH1H100D	CHIP C 10PF D		
C246			CK73GB1E223K	CHIP C 0.022UF K		
C247			C92-0004-05	CHIP TAN 1.0UF 16WV		
C248			CK73GB1E223K	CHIP C 0.022UF K		
C249,250			CK73GB1H102K	CHIP C 1000PF K		
C251			CC73GCH1H101J	CHIP C 100PF J		
C252			CK73GB1H122K	CHIP C 1200PF K		
C253			CC73FCH1H751J	CHIP C 750PF J		
C254			CC73GCH1H181J	CHIP C 180PF J		
C255			C92-0041-05	ELECTRO 10UF 10WV		
C256			CK73GB1H332K	CHIP C 3300PF K		
C257			CK73GB1H472K	CHIP C 4700PF K		
C260			CK73GB1H103K	CHIP C 0.01UF K		
C263			C92-0507-05	CHIP TAN 4.7UF 6.3WV		
C264			CC73GCH1H101J	CHIP C 100PF J		
C265			C92-0507-05	CHIP TAN 4.7UF 6.3WV		
C266			CC73GCH1H470J	CHIP C 47PF J		
CN1		*	E40-5737-05	PIN CONNECTOR ASSY (8P)		
CN2 ,3		*	E40-5738-05	PIN CONNECTOR ASSY (3P)		
CN4			E40-3247-05	PIN CONNECTOR ASSY (3P)		
CN5			E40-3246-05	PIN CONNECTOR ASSY (2P)		
CN6		*	E40-5733-05	FLAT CABLE CONNECTOR(24P)		
CN201		*	E40-5733-05	FLAT CABLE CONNECTOR(24P)		
CN203			E40-5585-05	PIN ASSY SOCKET		
CN205		*	E40-5710-05	FLAT CABLE CONNECTOR(9P)		
J1			E11-0408-05	PHONE JACK		
J201		*	E58-0426-05	MODULAR JACK		
F1			F53-0108-05	FUSE (1.8A)		
-			J30-0545-05	SPACER		
CD1			L79-1013-05	DISCRI COIL (455KHZ)		
CF1			L72-0372-05	CERAMIC FILTER(455KHZ)	940	
CF1			L72-0376-05	CERAMIC FILTER(455KHZ)	941	
L1			L40-6885-34	SMALL FIXED INDUCTOR(680NH)	940	
L1			L40-8281-34	SMALL FIXED INDUCTOR(820NH)	941	
L2			L40-1295-34	SMALL FIXED INDUCTOR(1.2UH)		
L3			L40-1871-36	SMALL FIXED INDUCTOR(18NH)		
L4			L40-2781-37	SMALL FIXED INDUCTOR(0.27UH)	940	
L4		*	L40-3381-37	SMALL FIXED INDUCTOR(0.33UH)	941	
L5		*	L40-1581-37	SMALL FIXED INDUCTOR(0.15UH)	940	
L5		*	L40-2281-37	SMALL FIXED INDUCTOR(0.22UH)	941	
L6		*	L79-1152-05	FILTER(860MHZ)	940	
L6		*	L79-[illegible]3-05	FILTER(938MHZ)	941	

L:Scandinavia K:USA P:Canada
Y:PX(Far East, Hawaii) T:England E:Europe
Y:AAFES(Europe) X:Australia M:Other Areas

⚠ indicates safety critical components.

PARTS LIST

* New Parts
Parts without Parts No. are not supplied.
Les articles non mentionnes dans le Parts No. ne sont pas fournis.
Teile ohne Parts No. werden nicht geliefert.

TX-RX UNIT (X57-4590-XX)

Ref. No. 参照番号	Address 位置	New Parts 新	Parts No. 部品番号	Description 部品名／規格	Destination 仕向	Remarks 備考
L7		*	L40-1071-36	SMALL FIXED INDUCTOR(10NH)		
L8		*	L40-6861-36	SMALL FIXED INDUCTOR(6.8NH)		
L9		*	L79-1152-05	FILTER(860MHZ)	940	
L9		*	L79-1153-05	FILTER(938MHZ)	941	
L10			L34-1306-15	COIL (5.5T)		
L11			L34-1307-05	COIL (2T)	940	
L11			L34-1313-05	COIL (2T)	941	
L12			L34-1306-15	COIL (5.5T)		
L13			L34-1307-05	COIL (2T)	940	
L13			L34-1313-05	COIL (2T)	941	
L14			L34-1317-05	COIL (3.5T)		
L15		*	L40-2291-37	SMALL FIXED INDUCTOR(2.2UH)		
L51		*	L33-1264-05	SMALL FIXED INDUCTOR(5.6NH)	941	
L51			L40-6861-35	SMALL FIXED INDUCTOR(6.8NH)	940	
L52		*	L33-1263-05	SMALL FIXED INDUCTOR(4.7NH)	941	
L52			L40-6861-35	SMALL FIXED INDUCTOR(6.8NH)	940	
X1		*	L77-1563-05	VCXO (12.8MHZ)	940	
X1		*	L77-1564-05	VCXO (12.8MHZ)	941	
X2			L77-1431-05	CRYSTAL RESONATOR(44.5825MHZ)	940	
X2			L77-1434-05	CRYSTAL RESONATOR(38.5825MHZ)	941	
X201			L78-0308-05	RESONATOR		
XF1		*	L71-0445-05	MCF (45.0375MHZ)	940	
XF1		*	L71-0446-05	MCF (39.0375MHZ)	941	
R1 ,2			RK73GB1J102J	CHIP R 1.0K J 1/16W		
R3			RK73GB1J103J	CHIP R 10K J 1/16W		
R4			R92-1252-05	CHIP R 0 OHM		
R5 ,6			R92-0670-05	CHIP R 0 OHM		
R7 -12			RK73GB1J102J	CHIP R 1.0K J 1/16W		
R13			R92-1252-05	CHIP R 0 OHM		
R14			RK73GB1J102J	CHIP R 1.0K J 1/16W		
R15			R92-1252-05	CHIP R 0 OHM		
R16			RK73GB1J103J	CHIP R 10K J 1/16W		
R17			RK73GB1J104J	CHIP R 100K J 1/16W		
R18			RK73GB1J123J	CHIP R 12K J 1/16W		
R19			RK73GB1J472J	CHIP R 4.7K J 1/16W		
R21			RK73GB1J153J	CHIP R 15K J 1/16W		
R22			RK73GB1J104J	CHIP R 100K J 1/16W		
R23			RK73GB1J471J	CHIP R 470 J 1/16W		
R24			RK73GB1J102J	CHIP R 1.0K J 1/16W		
R25			RK73GB1J154J	CHIP R 150K J 1/16W	941	
R25			RK73GB1J473J	CHIP R 47K J 1/16W	940	
R26			RK73GB1J102J	CHIP R 1.0K J 1/16W		
R27			RK73GB1J224J	CHIP R 220K J 1/16W	940	
R27			RK73GB1J474J	CHIP R 470K J 1/16W	941	
R28			RK73GB1J104J	CHIP R 100K J 1/16W		
R29			RK73GB1J223J	CHIP R 22K J 1/16W		
R30			RK73GB1J104J	CHIP R 100K J 1/16W		
R31			RK73GB1J223J	CHIP R 22K J 1/16W		
R32			RK73GB1J183J	CHIP R 18K J 1/16W		
R33			RK73GB1J470J	CHIP R 47 J 1/16W	940	
R33			RK73GB1J680J	CHIP R 68 J 1/16W	941	
R34 -36			RK73GB1J473J	CHIP R 47K J 1/16W		
R37			RK73GB1J103J	CHIP R 10K J 1/16W		
R38			RK73GB1J[illegible]2J	CHIP R [illegible] J 1/16W		

L:Scandinavia **K:**USA Canada
Y:PX(Far East, Hawaii) **T:**England **E:**Europe
Y:AAFES(Europe) **X:**Australia **M:**Other Areas

⚠ indicates safety critical components.

PARTS LIST

* New Parts
Parts without Parts No. are not supplied.
Les articles non mentionnés dans le Parts No. ne sont pas fournis
Teile ohne Parts No. werden nicht geliefert.

TX-RX UNIT (X57-4590-XX)

Ref. No. 参照番号	Address 位置	New Parts 新	Parts No. 部品番号	Description 部品名／規格	Destination 仕向	Remarks 備考
R39			RK73GB1J224J	CHIP R 220K J 1/16W		
R40			RK73GB1J152J	CHIP R 1.5K J 1/16W		
R41 ,42			RK73GB1J472J	CHIP R 4.7K J 1/16W		
R43			RK73GB1J473J	CHIP R 47K J 1/16W		
R44			RK73GB1J220J	CHIP R 22 J 1/16W		
R45			RK73GB1J273J	CHIP R 27K J 1/16W		
R46			RK73GB1J473J	CHIP R 47K J 1/16W		
R47			RK73GB1J223J	CHIP R 22K J 1/16W		
R48			RK73GB1J563J	CHIP R 56K J 1/16W		
R49			RK73GB1J104J	CHIP R 100K J 1/16W		
R50			RK73GB1J472J	CHIP R 4.7K J 1/16W		
R51			RK73GB1J104J	CHIP R 100K J 1/16W		
R52			RK73GB1J220J	CHIP R 22 J 1/16W		
R53			R92-1252-05	CHIP R 0 OHM		
R54			RK73GB1J824J	CHIP R 820K J 1/16W		
R55 ,56			RK73GB1J102J	CHIP R 1.0K J 1/16W		
R58			RK73GB1J824J	CHIP R 820K J 1/16W		
R59			RK73GB1J122J	CHIP R 1.2K J 1/16W		
R60 ,61			RK73GB1J102J	CHIP R 1.0K J 1/16W		
R62			RK73GB1J104J	CHIP R 100K J 1/16W		
R63			RK73GB1J822J	CHIP R 8.2K J 1/16W		
R64			RK73GB1J104J	CHIP R 100K J 1/16W		
R65			RK73GB1J102J	CHIP R 1.0K J 1/16W		
R66			RK73GB1J152J	CHIP R 1.5K J 1/16W		
R67			RK73GB1J103J	CHIP R 10K J 1/16W		
R68			RK73GB1J471J	CHIP R 470 J 1/16W		
R69			RK73GB1J104J	CHIP R 100K J 1/16W		
R70			RK73GB1J223J	CHIP R 22K J 1/16W		
R71			RK73GB1J684J	CHIP R 680K J 1/16W		
R72			RK73GB1J103J	CHIP R 10K J 1/16W		
R73			RK73GB1J101J	CHIP R 100 J 1/16W		
R74			RK73GB1J561J	CHIP R 560 J 1/16W		
R75			RK73GB1J103J	CHIP R 10K J 1/16W		
R76			RK73GB1J682J	CHIP R 6.8K J 1/16W		
R77			RK73GB1J470J	CHIP R 47 J 1/16W		
R78			RK73GB1J473J	CHIP R 47K J 1/16W		
R79			RK73GB1J102J	CHIP R 1.0K J 1/16W		
R81			RK73GB1J102J	CHIP R 1.0K J 1/16W		
R82			RK73GB1J471J	CHIP R 470 J 1/16W		
R83			RK73GB1J102J	CHIP R 1.0K J 1/16W		
R84			RK73GB1J101J	CHIP R 100 J 1/16W		
R85			RK73GB1J561J	CHIP R 560 J 1/16W		
R86			RK73GB1J102J	CHIP R 1.0K J 1/16W		
R87			RK73FB2A271J	CHIP R 270 J 1/10W		
R88			RK73FB2A2R2J	CHIP R 2.2 J 1/10W		
R89			RK73FB2A180J	CHIP R 18 J 1/10W		
R90			RK73GB1J331J	CHIP R 330 J 1/16W		
R91			RK73FB2A271J	CHIP R 270 J 1/10W		
R92			R92-0699-05	SOLID 10 1/2W		
R93			RK73FB2A102J	CHIP R 1.0K J 1/10W		
R94			R92-0699-05	SOLID 10 1/2W		
R95			RK73EB2B471J	CHIP R 470 J 1/8W	940	
R96			RK73GB1J100J	CHIP R 10 J 1/16W		
R97			RK73FB2A220J	CHIP R 22 J 1/10W	940	
R98			RK73FB2A220J	CHIP R 22 J 1/10W	940	

L:Scandinavia K:USA P:Canada
Y:PX(Far East, Hawaii) T:England E:Europe
Y:AAFES(Europe) X:Australia M:Other Areas

⚠ indicates safety critical components.

PARTS LIST

× New Parts
Parts without Parts No. are not supplied.
Les articles non mentionnes dans le Parts No. ne sont pas fournis.
Teile ohne Parts No. werden nicht geliefert

TX-RX UNIT (X57-4590-XX)

Ref. No. 参照番号	Address 位置	New Parts 新	Parts No. 部品番号	Description 部品名／規格			Destination 仕向	Remarks 備考
R98			R92-0670-05	CHIP R	0 ΩHM		941	
R99			RK73FB2A470J	CHIP R	47	J 1/10W		
R100			RK73EB2B471J	CHIP R	470	J 1/8W	940	
R101			RK73FB2A470J	CHIP R	47	J 1/10W		
R102			RK73EB2B181J	CHIP R	180	J 1/8W		
R103			RK73EB2B151J	CHIP R	150	J 1/8W		
R104			RK73FB2A223J	CHIP R	22K	J 1/10W		
R105			RK73GB1J101J	CHIP R	100	J 1/16W		
R106			RK73FB2A154J	CHIP R	150K	J 1/10W		
R107			RK73FB2A473J	CHIP R	47K	J 1/10W		
R108-110			R92-1203-05	CHIP R	0.22	J 1/2W		
R111			RK73GB1J473J	CHIP R	47K	J 1/16W		
R112			RK73FB2A472J	CHIP R	4.7K	J 1/10W		
R113			RK73FB2A272J	CHIP R	2.7K	J 1/10W		
R114			RK73GB1J103J	CHIP R	10K	J 1/16W		
R115,116			RK73FB2A472J	CHIP R	4.7K	J 1/10W		
R117			R92-1268-05	FIXED R	4.7K	1/8W		
R118		*	R92-2538-05	FIXED R	3.9K	1/8W		
R119			R92-1261-05	FIXED R	150	1/2W		
R120			RK73GB1J333J	CHIP R	33K	J 1/16W		
R121			RK73GB1J471J	CHIP R	470	J 1/16W		
R122,123		*	R92-2540-05	FIXED R	3.9	1/4W		
R124			RK73GB1J102J	CHIP R	1.0K	J 1/16W		
R125			RK73GB1J682J	CHIP R	6.8K	J 1/16W		
R126			RK73GB1J472J	CHIP R	4.7K	J 1/16W		
R206,207			RK73GB1J102J	CHIP R	1.0K	J 1/16W		
R209			RK73GB1J102J	CHIP R	1.0K	J 1/16W		
R211,212			RK73GB1J102J	CHIP R	1.0K	J 1/16W		
R213			RK73GB1J681J	CHIP R	680	J 1/16W		
R214,215			RK73GB1J102J	CHIP R	1.0K	J 1/16W		
R216,217			RK73GB1J473J	CHIP R	47K	J 1/16W		
R219			RK73GB1J153J	CHIP R	15K	J 1/16W		
R220			RK73GB1J563J	CHIP R	56K	J 1/16W		
R221			RK73GB1J183J	CHIP R	18K	J 1/16W		
R222			RK73GB1J103J	CHIP R	10K	J 1/16W		
R223			RK73GB1J223J	CHIP R	22K	J 1/16W		
R224			RK73GB1J224J	CHIP R	220K	J 1/16W		
R225			RK73GB1J474J	CHIP R	470K	J 1/16W		
R226			RK73GB1J224J	CHIP R	220K	J 1/16W		
R227			RK73GB1J223J	CHIP R	22K	J 1/16W		
R228			RK73GB1J473J	CHIP R	47K	J 1/16W		
R229			RK73GB1J684J	CHIP R	680K	J 1/16W		
R230			RK73GB1J223J	CHIP R	22K	J 1/16W		
R231			R92-1252-05	CHIP R	0 ΩHM			
R232			RK73GB1J473J	CHIP R	47K	J 1/16W		
R233			RK73GB1J824J	CHIP R	820K	J 1/16W		
R234			RK73GB1J224J	CHIP R	220K	J 1/16W		
R235			RK73GB1J124J	CHIP R	120K	J 1/16W		
R236			RK73GB1J154J	CHIP R	150K	J 1/16W		
R237			RK73GB1J473J	CHIP R	47K	J 1/16W		
R238			RK73GB1J561J	CHIP R	560	J 1/16W		
R239-241			RK73GB1J473J	CHIP R	47K	J 1/16W		
R242			RK73GB1J153J	CHIP R	15K	J 1/16W		
R243			RK73GB1J273J	CHIP R	27K	J 1/16W		
R244			RK73GB1J473J	CHIP R	47K	J 1/16W		

L:Scandinavia **K:**USA **P:**Canada
Y:PX(Far East, Hawaii) **T:**England **E:**Europe
Y:AAFES(Europe) **X:**Australia **M:**Other Areas

⚠ indicates safety critical components.

PARTS LIST

× New Parts
Parts without Parts No. are not supplied
Les articles non mentionnes dans le Parts No. ne sont pas fournis
Teile ohne Parts No werden nicht geliefert

TX-RX UNIT (X57-4590-XX)

Ref. No. 参照番号	Address 位置	New Parts 新	Parts No. 部品番号	Description 部品名／規格	Destination 仕向	Remarks 備考
R245			RK73GB1J104J	CHIP R 100K J 1/16W		
R246,247			RK73GB1J103J	CHIP R 10K J 1/16W		
R248,249			RK73GB1J473J	CHIP R 47K J 1/16W		
R250			RK73GB1J223J	CHIP R 22K J 1/16W		
R251			RK73GB1J473J	CHIP R 47K J 1/16W		
R254			RK73GB1J823J	CHIP R 82K J 1/16W		
R255,256			RK73GB1J473J	CHIP R 47K J 1/16W		
R257			RK73GB1J823J	CHIP R 82K J 1/16W		
R258-260			RK73GB1J473J	CHIP R 47K J 1/16W		
R262,263			RK73GB1J473J	CHIP R 47K J 1/16W		
R265,266			RK73GB1J473J	CHIP R 47K J 1/16W		
R267,268			RK73GB1J683J	CHIP R 68K J 1/16W		
R269			RK73GB1J223J	CHIP R 22K J 1/16W		
R270,271			RK73GB1J473J	CHIP R 47K J 1/16W		
R272			RK73GB1J103J	CHIP R 10K J 1/16W		
R273,274			RK73GB1J473J	CHIP R 47K J 1/16W		
R275			RK73GB1J103J	CHIP R 10K J 1/16W		
R277			R92-1252-05	CHIP R 0 ØHM	941	
R278			RK73GB1J223J	CHIP R 22K J 1/16W		
R280,281			RK73GB1J473J	CHIP R 47K J 1/16W		
R283,284			RK73GB1J473J	CHIP R 47K J 1/16W		
R285			RK73FB2A100J	CHIP R 10 J 1/10W		
R286			RK73GB1J683J	CHIP R 68K J 1/16W		
R287			RK73GB1J563J	CHIP R 56K J 1/16W		
R288			RK73GB1J272J	CHIP R 2.7K J 1/16W		
R289			RK73GB1J104J	CHIP R 100K J 1/16W		
R290			RK73GB1J224J	CHIP R 220K J 1/16W		
R291			R92-0679-05	CHIP R 0 ØHM		
VR201			R12-6423-05	TRIMMING PØT. 10K		
D1			02CZ18(X,Y)	ZENER DIØRD		
D2			DSA3A1	DIØRD		
D4			1SS301	DIØRD		
D7			DA204K	DIØRD		
D8			02CZ15(X,Y)	ZENER DIØRD		
D9 ,10			DA204K	DIØRD		
D11			1SS301	DIØRD		
D12 -15			DA204K	DIØRD		
D16			02CZ20(Y,Z)	ZENER DIØRD		
D17			DAN235K	DIØDE		
D18			HSM88AS	DIØRD		
D19			MI809	DIØRD		
D20		*	MA4P1250	DIØRD		
D21			MI809	DIØRD		
D22			MA77	DIØRD		
D201,202			DA204K	DIØRD		
D203			1SS301	DIØRD		
IC1			BU4013BF	IC		
IC2			NJM4558E	IC(ØP AMP X2)		
IC3			NJM78L05UA	IC(VØLTAGE REGULATØR/ +5V)		
IC4			UPC7808H	IC(VØLTAGE REGULATØR/ +8V)		
IC5			NJM4558E	IC(ØP AMP X2)		
IC6			M62363FP	IC(8bit D/A CØNVERTER)		
IC7			MC3372V	IC(FM IF)		
IC8 ,9			NJM4558E	IC(ØP AMP X2)		

L:Scandinavia K:USA P:Canada
Y:PX(Far East, Hawaii) T:England E:Europe
Y:AAFES(Europe) X:Australia M:Other Areas

⚠ indicates safety critical components.

PARTS LIST

× New Parts
Parts without Parts No. are not supplied.
Les articles non mentionnes dans le Parts No. ne sont pas fournis.
Teile ohne Parts No. werden nicht geliefert.

TX-RX UNIT (X57-4590-XX)
PLL/VCO (X58-4170-XX)

Ref. No. 参照番号	Address 位置	New Parts 新	Parts No. 部品番号	Description 部品名／規格	Destination 仕向	Remarks 備考
IC10			XRU4094BCF	IC		
IC10			BU4094BCF	IC		
IC11		*	LA4422	IC		
IC13			NJM2904M	IC(OP AMP X2)		
IC201		*	AT24C02N10SI2.7	IC(256X8bit EEPROM)		
IC202			NJM78L05UA	IC(VOLTAGE REGULATOR/ +5V)		
IC203			HD74HC373FP	IC(D-TYPE TRANSPARENT LATCES)		
IC204,205			NJM4558E	IC(OP AMP X2)		
IC206			S-8054ALB-LM-T1	IC(VOLTAGE DETECTOR)		
IC207		*	AT29C256-20TI	IC(32X8bit PEROM)		
IC208			TC7S32F	IC(2CH NAND GATE)		
IC209		*	78312AGF3563BE	IC(CPU)		
IC210			TC7S04F	IC(2CH NAND GATE)		
IC211			NJM4558E	IC(OP AMP X2)		
IC212			TA75S01F	IC(OP AMP)		
Q1			DTA114EU	DIGITAL TRANSISTOR		
Q2 ,3			DTC114EU	DIGITAL TRANSISTOR		
Q4			2SA1641(S,T)	TRANSISTOR		
Q5			DTA114YU	DIGITAL TRANSISTOR		
Q6 ,7			2SB1188(Q,R)	TRANSISTOR		
Q8			2SA1362(Y)	TRANSISTOR		
Q9 -13			DTC114EU	DIGITAL TRANSISTOR		
Q14			2SD1624(S)	TRANSISTOR		
Q15			2SC4116(GR)	TRANSISTOR		
Q16			2SC4215(Y)	TRANSISTOR		
Q17			DTA114TU	DIGITAL TRANSISTOR		
Q18			2SC4226(R24)	TRANSISTOR		
Q19			DTC144EU	DIGITAL TRANSISTOR		
Q20			DTC314TK	DIGITAL TRANSISTOR		
Q21			3SK241(R)	FET		
Q22			2SB1370(E,F)	TRANSISTOR		
Q23			2SC4116(GR)	TRANSISTOR		
Q24			2SC4094(R37)	TRANSISTOR		
Q25			DTA144EU	DIGITAL TRANSISTOR		
Q26			DTC144EU	DIGITAL TRANSISTOR		
Q27			DTA114YU	DIGITAL TRANSISTOR		
Q28			DTC114YU	DIGITAL TRANSISTOR		
Q29			DTC114EU	DIGITAL TRANSISTOR		
Q30			2SA1586(Y,GR)	TRANSISTOR		
Q201			DTC114EU	DIGITAL TRANSISTOR		
Q202			DTC144EU	DIGITAL TRANSISTOR		
TH201			157-302-53008	THERMISTOR(3K)		
A1		*	X58-4170-10	SUB UNIT (PLL/VCO)	940	
A1		*	X58-4170-11	SUB UNIT (PLL/VCO)	941	
PLL/VCO (X58-4170-XX) -10 : TK-940 -11 : TK-941						
C1			CC73GCH1H101J	CHIP C 100PF J		
C2			CK73GB1H102K	CHIP C 1000PF K		
C3			C92-0004-05	CHIP TAN 1.0UF 16WV		
C4 ,5			CC73GCH1H101J	CHIP C 100PF J		
C6			CK73GB1H102K	CHIP C 1000PF K		
C7			C92-0543-05	CHIP TAN 3.3UF 10WV		
C8			CK73GB1H103K	CHIP C 0.01UF K		
C9			C92-0536-05	CHIP TAN 10UF 10WV		
C10			C92-0555-05	TANTAL C		

L:Scandinavia **K:**USA **P:**Canada
Y:PX(Far East, Hawaii) **T:**England **E:**Europe
Y:AAFES(Europe) **X:**Australia **M:**Other Areas

⚠ indicates safety critical components.

PARTS LIST

× New Parts
Parts without Parts No. are not supplied.
Les articles non mentionnes dans le Parts No. ne sont pas fournis
Teile ohne Parts No. werden nicht geliefert

PLL/VCO (X58-4170-XX)

Ref. No. 参照番号	Address 位置	New Parts 新	Parts No. 部品番号	Description 部品名／規格	Destination 仕向	Remarks 備考
C11			CC73GCH1H010C	CHIP C 1PF C		
C12			CK73GB1H102K	CHIP C 1000PF K		
C13			C92-0004-05	CHIP TAN 1.0UF 16WV		
C14			CC73GCH1H040C	CHIP C 4PF C		
C15			CC73GCH1H101J	CHIP C 100PF J		
C16			CC73GCH1H470J	CHIP C 47PF J		
C17			C92-0001-05	CHIP TAN 0.1UF 35WV		
C18 ,19			CK73GB1H102K	CHIP C 1000PF K		
C51 ,52			CK73GB1H471K	CHIP C 470PF K		
C53			CC73GCH1HR75C	CHIP C 0.75PF C		
C54			CC73GCH1H0R5C	CHIP C 0.5PF C		
C55			CC73GCH1H080D	CHIP C 8PF D	941	
C55			CC73GCH1H090D	CHIP C 9PF D	940	
C56			CC73GCH1H050C	CHIP C 5PF C	940	
C56			CC73GCH1H080D	CHIP C 8PF D	941	
C57			CC73GCH1H040C	CHIP C 4PF C		
C58			CC73GCH1H100D	CHIP C 10PF D		
C59			CC73GCH1H080D	CHIP C 8PF D	940	
C59			CC73GCH1H100D	CHIP C 10PF D	941	
C60			CC73GCH1H010C	CHIP C 1PF C		
C61			CK73GB1H102K	CHIP C 1000PF K		
C62			CC73GCH1H020C	CHIP C 2.0PF C	941	
C62			CC73GCH1H030C	CHIP C 3PF C	940	
C63			CC73GCH1H030C	CHIP C 3PF C		
C64			CC73GCH1H010C	CHIP C 1PF C	941	
C64			CC73GCH1H1R5C	CHIP C 1.5PF C	940	
C65 ,66			CK73GB1H102K	CHIP C 1000PF K		
C67			CK73GB1H102K	CHIP C 1000PF K	940	
C67			CK73GB1H471K	CHIP C 470PF K	941	
C68			CC73GCH1H470J	CHIP C 47PF J		
C69			CK73GB1H102K	CHIP C 1000PF K		
TC51			C05-0371-05	TRIM CAP 10PF		
CN1		*	E40-5699-05	PIN CONNECTOR ASSY(7P)		
CN2		*	E40-5700-05	PIN CONNECTOR ASSY(5P)		
704	-	*	F10-2127-14	SHIELDING PLATE		
L1			L40-1071-35	SMALL FIXED INDUCTOR(10NH)		
L51 ,52			L40-1095-34	SMALL FIXED INDUCTOR(1UH)		
L53			L34-2310-05	COIL	940	
L53			L34-2333-05	COIL	941	
L54 ,55			L40-1095-34	SMALL FIXED INDUCTOR(1UH)		
L56		*	L40-2771-35	SMALL FIXED INDUCTOR(27NH)		
L57			L40-3971-35	SMALL FIXED INDUCTOR(39NH)		
L58			L40-1071-35	SMALL FIXED INDUCTOR(10NH)	941	
L58			L40-1271-35	SMALL FIXED INDUCTOR(12NH)	940	
R1			RK73GB1J472J	CHIP R 4.7K J 1/16W		
R2 -4			RK73GB1J102J	CHIP R 1.0K J 1/16W		
R5			RK73GB1J123J	CHIP R 12K J 1/16W		
R6			RK73GB1J333J	CHIP R 33K J 1/16W		
R7			RK73GB1J101J	CHIP R 100 J 1/16W		
R8			RK73GB1J102J	CHIP R 1.0K J 1/16W		
R9			RK73GB1J472J	CHIP R 4.7K J 1/16W		
R10			RK73GB1J101J	CHIP R 100 J 1/16W		
R11			RK73GB1J473J	CHIP R 47K J 1/16W		

L:Scandinavia **K:**USA **P:**Canada
Y:PX(Far East, Hawaii) **T:**England **E:**Europe
Y:AAFES(Europe) **X:**Australia **M:**Other Areas

⚠ indicates safety critical components.

PARTS LIST

× New Parts
Parts without Parts No. are not supplied.
Les articles non mentionnes dans le Parts No. ne sont pas fournis.
Teile ohne Parts No. werden nicht geliefert

PLL/VCO (X58-4170-XX)
LCD ASSY (B38-0731-05)

Ref. No. 参照番号	Address 位置	New Parts 新	Parts No. 部品番号	Description 部品名／規格	Destination 仕向	Remarks 備考
R12 ,13			RK73GB1J102J	CHIP R 1.0K J 1/16W		
R14			RK73GB1J101J	CHIP R 100 J 1/16W		
R15			RK73GB1J332J	CHIP R 3.3K J 1/16W		
R16			RK73GB1J223J	CHIP R 22K J 1/16W		
R17			RK73GB1J472J	CHIP R 4.7K J 1/16W		
R18			RK73GB1J470J	CHIP R 47 J 1/16W		
R19			RK73GB1J103J	CHIP R 10K J 1/16W		
R20			RK73GB1J101J	CHIP R 100 J 1/16W		
R21 ,22			R92-1252-05	CHIP R 0 ØHM		
R51			R92-1252-05	CHIP R 0 ØHM		
R52 ,53			RK73GB1J223J	CHIP R 22K J 1/16W		
R54			RK73GB1J683J	CHIP R 68K J 1/16W		
R55			RK73GB1J470J	CHIP R 47 J 1/16W		
R56			RK73GB1J151J	CHIP R 150 J 1/16W		
R57			RK73GB1J103J	CHIP R 10K J 1/16W		
R58			RK73GB1J223J	CHIP R 22K J 1/16W		
R59			RK73GB1J270J	CHIP R 27 J 1/16W		
R60 ,61			RK73GB1J101J	CHIP R 100 J 1/16W		
R62			RK73GB1J823J	CHIP R 82K J 1/16W		
R63			RK73GB1J101J	CHIP R 100 J 1/16W		
D1			1SS301	DIØRD		
D51 ,52			1T363A	VARI CAP DIØRD		
D53			MA360	VARI CAP DIØRD		
IC1		*	SC370651F	IC		
IC1		*	MC145190F-K	IC		
Q1			DTC143EK	DIGITAL TRANSISTØR		
Q2			2SA1586(Y,GR)	TRANSISTØR		
Q3			2SC3356	TRANSISTØR		
Q51			2SK508NV(K52)	FET		
Q52 ,53			2SC3356	TRANSISTØR		
LCD ASSY (B38-0731-05)						
ED1	2A	*	B38-0722-05	LCD		
LED	2A	*	B38-0336-05	LED ASSY		
C1			CC73GCH1H101J	CHIP C 100PF J		
C2			CK73GB1H103K	CHIP C 0.01UF K		
C3 ,4			CC73GCH1H101J	CHIP C 100PF J		
C5			CK73GB1H103K	CHIP C 0.01UF K		
C6 -8			CC73GCH1H101J	CHIP C 100PF J		
C9			C92-0004-05	CHIP TAN 1.0UF 16WV		
C10 ,11			CK73GB1H103K	CHIP C 0.01UF K		
C12			C92-0507-05	CHIP TAN 4.7UF 6.3WV		
C13 -16			CK73GB1H103K	CHIP C 0.01UF K		
401	2A		E29-0494-08	INTER CØNNECTØR		
CN1		*	E40-5710-05	FLAT CABLE CØNNECTØR (9P)		
402	2A		J21-4306-08	MØUNTING HARDWARE		
X1			L78-0043-05	CRYSTAL RESØNATØR(4.194MHZ)		
R1			R92-1252-05	CHIP R 0 ØHM		
R2 -4			RK73FB2A271J	CHIP R 270 J 1/10W		
R5			RK73GB1J472J	CHIP R 4.7K J 1/10W		
R6			RK73FB2A271J	CHIP R 270 J 1/10W		
R7 ,8			RK73GB1J473J	CHIP R 47K J 1/16W		
R9			RK73GB1J103J	CHIP R 10K J 1/16W		

L:Scandinavia **K:**USA **P:**Canada
Y:PX(Far East, Hawaii) **T:**England **E:**Europe
Y:AAFES(Europe) **X:**Australia **M:**Other Areas

⚠ indicates safety critical components.

PARTS LIST

× New Parts
Parts without Parts No. are not supplied
Les articles non mentionnes dans le Parts No. ne sont pas fournis.
Teile ohne Parts No. werden nicht geliefert

LCD ASSY (B38-0731-05)

Ref. No. 参照番号	Address 位置	New Parts 新	Parts No. 部品番号	Description 部品名／規格	Destination 仕向	Remarks 備考
R10 ,11			RK73GB1J473J	CHIP R 47K J 1/16W		
R12			RK73GB1J103J	CHIP R 10K J 1/16W		
R13 -17			R92-1252-05	CHIP R 0 ΩHM		
R18 ,19			RK73GB1J472J	CHIP R 4.7K J 1/16W		
R20			RK73GB1J223J	CHIP R 22K J 1/16W		
R21 -23			R92-1252-05	CHIP R 0 ΩHM		
IC1			NJM78L05UA	IC(VΩLTAGE REGULATΩR/ +5V)		
IC2			75308BGK740BE9	IC(CPU)		

L:Scandinavia K:USA P:Canada
Y:PX(Far East, Hawaii) T:England [redacted]
Y:AAFES(Europe) X:Australia [redacted]

⚠ indicates safety critical components.

EXPLODED VIEW

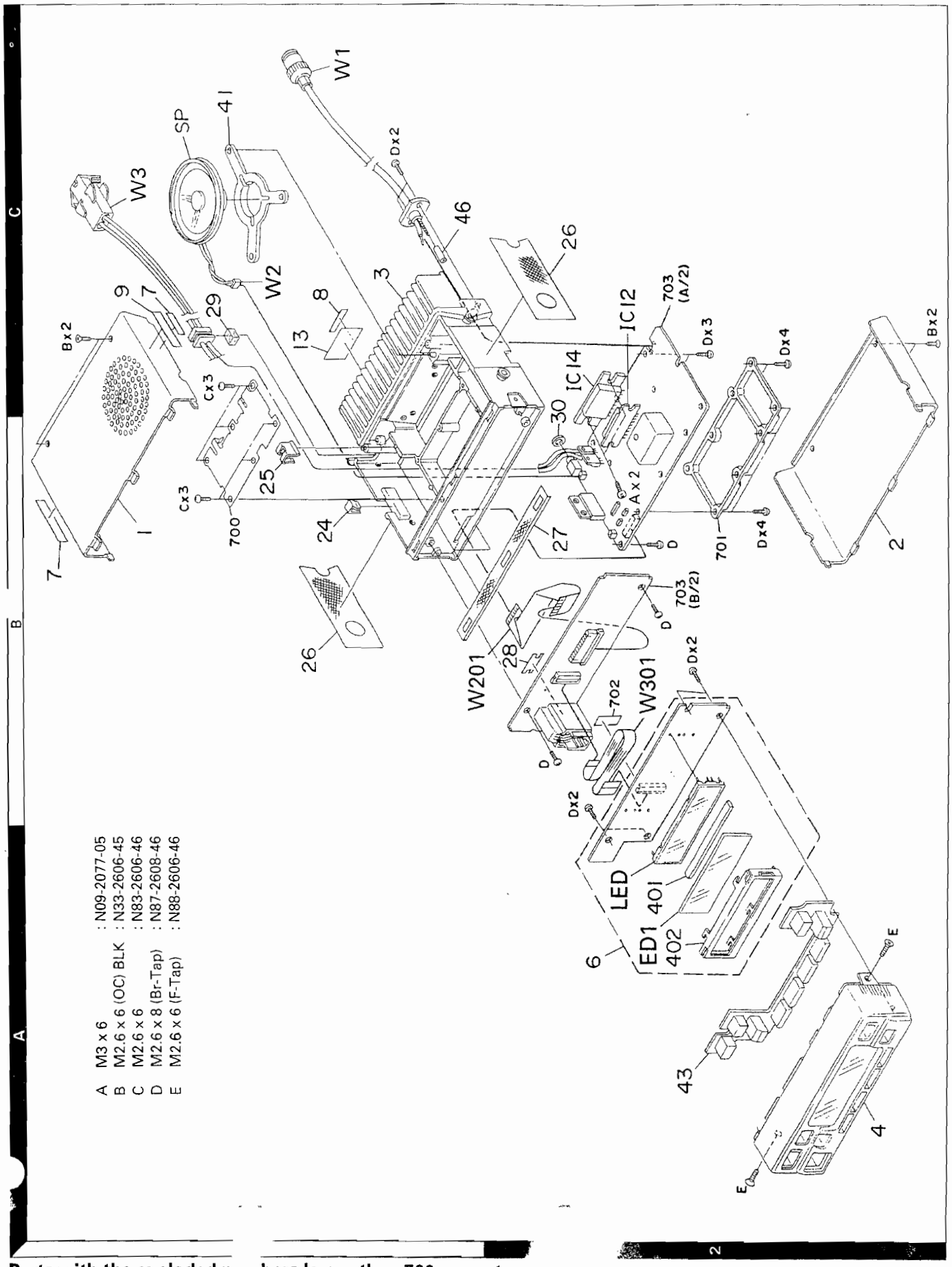

Parts with the exploded n. .bers larger than 700 are not su

PACKING

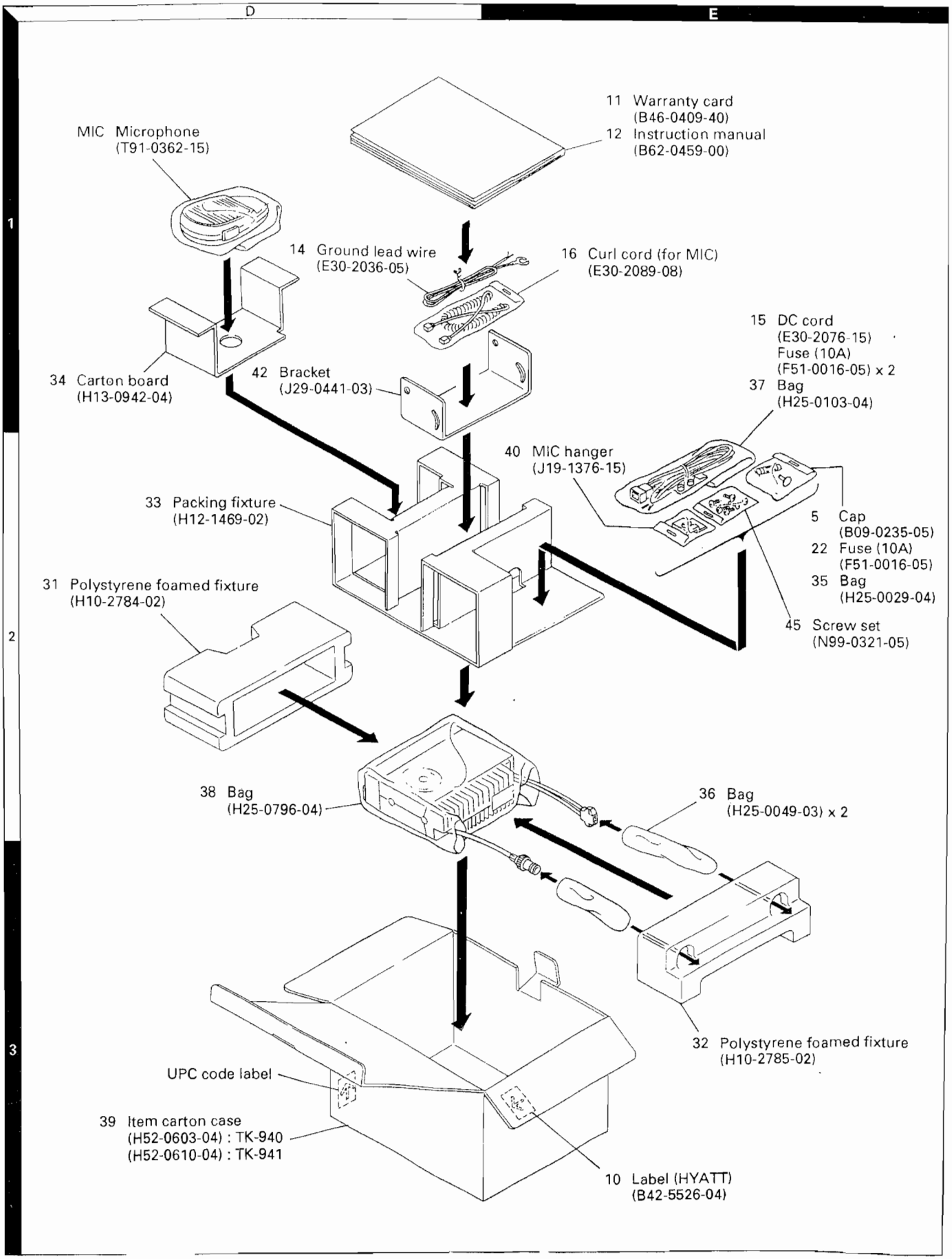

ADJUSTMENT

Test Equipment Required for Alignment

Test Equipment	Major Specifications	
1 Standard Signal Generator (SSG)	Frequency Range Modulation Output	800 to 950MHz Frequency modulation and external modulation −127dBm/0.1μV to greater than −7dBm/100mV
2. Power Meter	Input Impedance Operation Frequency Measurement Capability	50Ω 800 to 950MHz or more Vicinity of 30W
3. Deviation Meter	Frequency Range	800 to 950MHz
4. Digital Volt Meter (DVM)	Measuring Range Accuracy	1 to 10V DC High input impedance for minimum circuit loading
5. Oscilloscope		DC through 30MHz
6. High Sensitivity Frequency Counter	Frequency Range Frequency Stability	10Hz to 1000MHz 0.2ppm or less
7. Ammeter		10A
8. AF Volt Meter (AF VTVM)	Frequency Range Voltage Range	50Hz to 10kHz 3mV to 3V
9. Audio Generator (AG)	Frequency Range Output	50Hz to 5kHz or more 0 to 1V
10. Distortion Meter	Capability Input Level	3% or less at 1kHz 50mV to 10Vrms
11. Voltmeter	Measuring Range Input Impedance	1.5 to 30V DC or less 50kΩ/V or greater
12. 4Ω Dummy Load		Approx. 4Ω, 3W
13. Regulated Power Supply		13.6V, approx. 10A (adjustable from 9 to 17V) Useful if ammeter requipped

MIC connector front view

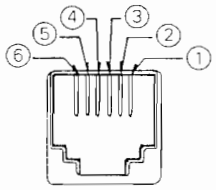

① SB
② PTTG
③ PTT
④ MICG
⑤ MIC
⑥ HOOK

- The following test cables are recommended.

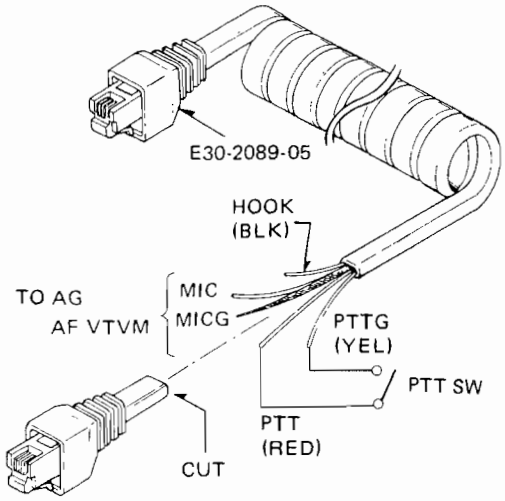

Test cable for Microphone input

ADJUSTMENT

Adjustment Location

1. Switch

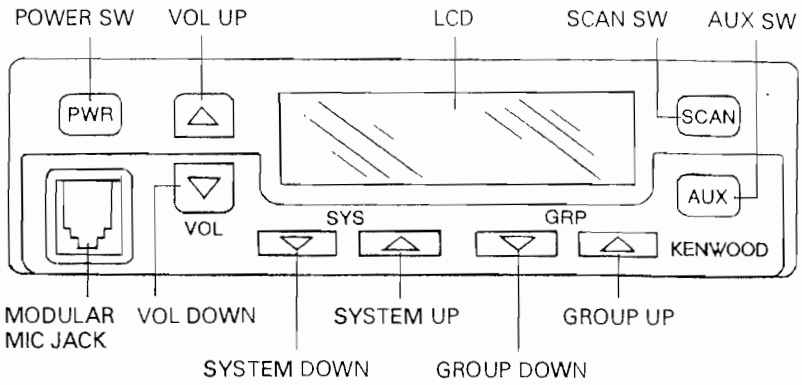

2. Display section (LCD)

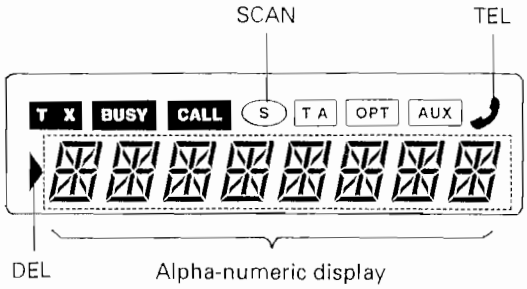

- **User mode**

No.	Key name		Description	
1	PWR	Non-lock	Power supply	ON/OFF
2	VOL	Non-lock	Receive volume, beep volume	UP/DOWN
3	SYS	Non-lock	System	UP/DOWN
4	GRP	Non-lock	Group	UP/DOWN
5	SCAN	Non-lock	System scan (LTR/Conventional)	ON/OFF
			System search (LTR)	ON/OFF
6	AUX	Non-lock	AUX function	ON/OFF

AUX function (Can be set by the FPU)

1	Horn alert ON/OFF
2	Manual relay ON/OFF
3	Group name ON/OFF
4	Fixed revert call
5	Auto tel
6	Delete
7	Optional signaling reset

No.	Name	Description
1	Alpha-numeric (8 digits)	Shows the group name, system, and group numbers. System : Shows a selected system number (1 to 32). Group : Shows a selected group number (1 to 250)
2	(S)	SCAN indicator
3	▶	Delete indicator
4	TX	Transmission indicator
5	BUSY	Busy indicator
6	CALL	Call indicator
7	TA	Talk-around indicator
8	AUX	Displayed when the horn alert or manual relay function is turned on with the AUX key.
9	OPT	Decode latch indicator (KDD-4)
10	☎	Telephone indicator

- **Dealer mode**

No.	Key name		Description	
1	PWR	Non-lock	Power supply	ON/OFF
2	VOL	Non-lock	Receive volume, beep volume	UP/DOWN
3	SYS	Non-lock	System	UP/DOWN
4	GRP	Non-lock	Group	UP/DOWN
5	SCAN	Non-lock	Squelch	ON/OFF
6	AUX	Non-lock	Talk around	ON/OFF

- **Tuning mode**

No.	Key name		Description	
1	PWR	Non-lock	Power supply	ON/OFF
2	VOL	Non-lock	Receive volume, beep volume	UP/DOWN
3	SYS	Non-lock	System	UP/DOWN
			Adjustment item selection	
4	GRP	Non-lock	Group	UP/DOWN
			Adjustment level	UP/DOWN
5	SCAN	Non-lock	Switching between frequency mode and adjustment mode	
6	AUX	Non-lock	Adjustment data writing	

ADJUSTMENT

Common Section

Item	Condition	Measurement			Adjustment			Specifications/Remarks
		Test-equipment	Unit	Terminal	Unit	Parts	Method	

1. Memory frequency

TK-940

- **Frequency range (MHz)**
  TX : 806.000~825.000 / TA : 851.000~870.000
  RX : 851.000~870.000
- **Adjustment frequency (MHz)**

SYS	TX	RX
1	806.050	851.050
2	806.550	851.550
3	815.000	860.000
4	815.500	860.500
5	820.9875	865.9875
6	824.400	869.400
7	824.900	869.900
8	810.400	855.400
9	820.600	865.600
10	811.400	856.400

TK-941

- **Frequency range (MHz)**
  TX : 896.000~902.000 / TA : 935.000~941.000
  RX : 935.000~941.000
- **Adjustment frequency (MHz)**

SYS	TX	RX
1	896.000	935.000
2	896.025	935.025
3	899.000	938.000
4	899.025	938.025
5	900.9875	939.9875
6	901.400	940.400
7	901.900	940.900
8	897.250	936.250
9	900.300	939.300
10	897.750	936.750

- **Signaling**

GRP	Modulation	Squelch type
1	None	Carrier
2	100Hz square wave	Carrier
3	LTR format data	LTR format data
4	QT (67.0Hz) tone	QT (67.0Hz)
5	QT (151.4Hz) tone	QT (151.4Hz)
6	QT (210.7Hz) tone	QT (210.7Hz)
7	DQT (023N) code	DQT (023N)
8	DQT (754N) code	DQT (754N)

2. Setting

- **Receiver section**
  The indicated SSG output level are for maximum output.
  Whenever there is no modulation designation, standard modulation (MOD : 1kHz, DEV : ±3kHz (TK-940), ±1.5kHz (TK-941)) is indicated.

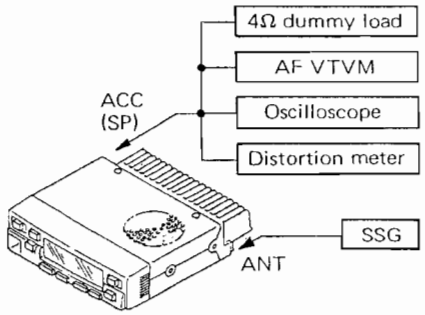

- **Transmitter section**

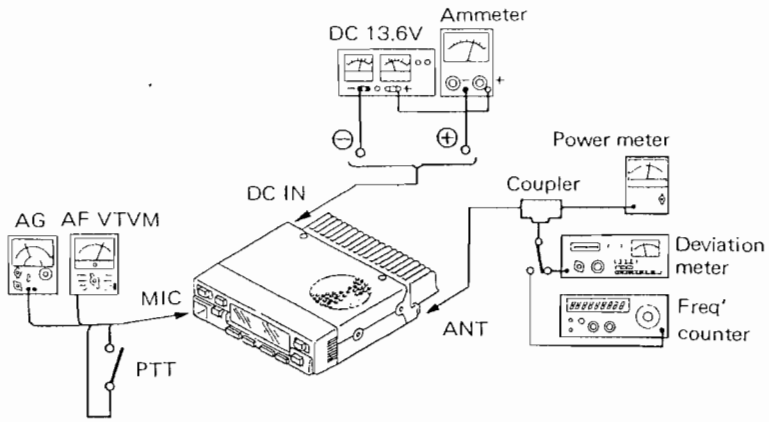

3. Dealer mode setting

1) Power supply voltage : DC 13.6V
2) Hold the GRP UP key down and press the PWR key.
   (Keep the GRP UP key down for two seconds after the power comes on.)

4. Tuning mode setting and operation procedure

• Procedure	• Operation procedure
1. Set tuning mode	Hold the GRP DOWN key down and press the PWR key. (Keep the GRP DOWN key down for two seconds after the power comes on.)
2. Select SYS and GRP	SYS key UP/DOWN, GRP key UP/DOWN
3. Set adjustment mode	Press the SCAN key once.
4. Select adjustment items	SYS key UP/DOWN Adjustment items : SQL, POW, DEV, BRL, FQT, FDQT, FID, FREQ
5. Carry out adjustment	GRP key UP/DOWN
Determine setting	Press the AUX key once. (Move to the next adjustment item.)
Adjustment is complete	Press the PWR key once. (Power OFF)

ADJUSTMENT

Item	Condition	Measurement			Adjustment			Specifications/Remarks
		Test-equipment	Unit	Terminal	Unit	Parts	Method	
5. PLL lock voltage	1) Set dealer mode CH SYS 7 (fH) GRP 1 AUX ON (Talk-around mode) PTT . ON (Transmit)	DVM Power meter	TX-RX (A/2)	CV	PLL	TC51	6.7V	±0.1V
	2) CH · SYS 1 (fL) GRP 1						Check	TK-940 : 1.2V or more TK-941 : 2.0V or more

Receiver Section

Item	Condition	Measurement			Adjustment			Specifications/Remarks
		Test-equipment	Unit	Terminal	Unit	Parts	Method	
1. Sensitivity check	1) Set dealer mode CH : SYS 1, 4, 7 GRP 1 SSG freq' . Each frequency Output : -119dBm/0.25μV MOD : 1kHz AF output : 1V/4Ω	SSG AF VTVM Distortion meter Oscilloscope AG	Rear panel	ANT ACC (EXT.SP)			Check	SINAD 12dB or more
2. Squelch	1) Set tuning mode CH : SYS 4 GRP 1 Select SQL in adjustment mode. SSG freq' : 860.500MHz (TK-940) · 938 025MHz (TK-941) SSG output Value when 3dB is subtracted from the sensitivity value of 12dB SINAD. SSG MOD 1kHz						Squelch closed once. Then squelch must be opened.	
3. Squelch check	1) Set dealer mode CH : SYS 4 GRP 1 SSG output : 8dB SINAD level						Check	Squelch must be opened
	2) SSG output : OFF							Squelch must be closed.
4. QT check	1) Set dealer mode CH : SYS 4 GRP 1 SSG MOD INT 1kHz EXT · 151 4Hz SSG system MOD DEV : ±3 75kHz (TK-940) : ±1.85kHz (TK-941) SSG output 10dB SINAD level							
	2) CH SYS 4 GRP 5						Check	Squelch must be opened.
	3) CH : SYS 4 GRP . 4, 6							Squelch must be closed.

ADJUSTMENT

Transmitter Section

Item	Condition	Measurement			Adjustment			Specifications/Remarks
		Test-equipment	Unit	Terminal	Unit	Parts	Method	
1. Frequency	1) Set tuning mode CH SYS 4 GRP 1 Select FREQ in adjustment mode. PTT . ON	Power meter F counter	Rear panel	ANT			TK-940 815.500MHz TK-941 899.025MHz	±50Hz
2. Maximum power check	1) Set tuning mode CH · SYS 4 GRP 1 PTT . ON	Power meter	Rear panel	ANT			Check (Maximum power position)	16.5W or more
3. Power	1) Set tuning mode CH . SYS 4 GRP 1 Select POW in adjustment mode. PTT : ON						15.0W	±0.5W
4. Power check	1) Set dealer mode CH . SYS 1, 7 GRP 1 PTT : ON	Power meter Ammeter	Rear panel	ANT DC IN			Check	12.0~18.0W 6A or less
	2) TA mode ON (AUX key : ON) CH · SYS 7 GRP 1							10.0~18.0W 6A or less
5. Modulation balanced	1) Set tuning mode CH SYS 4 GRP 2 MIC input OFF Select BAL in adjustment mode. Deviation meter filter LPF 3kHz HPF . OFF De-emphasis : OFF PTT · ON	Power meter Deviation meter Oscilloscope AF VTVM AG	Rear panel Front panel	ANT MIC			Make the de-modulation waveform neat.	
6. Maximum deviation	1) Set tuning mode CH . SYS 4 GRP 1 Connect AG to the MIC terminal. Select DEV in adjustment mode. AG : 1kHz/50mV Deviation meter filter LPF : 15kHz HPF OFF De-emphasis . OFF PTT : ON						TK-940 : 3.8kHz TK-941 : 1.7kHz (According to the larger +, –)	±70Hz
7. MIC sensitivity check	1) Set tuning mode CH : SYS 4 GRP 1 AG : 1kHz/5mV (TK-940) 1kHz/2.5mV (TK-941) PTT : ON						Check	TK-940 : ±3kHz ± 0.2kHz TK-941 : ±0.75kHz ± 0.15kHz

ADJUSTMENT

Item	Condition	Measurement			Adjustment			Specifications/Remarks
		Test-equipment	Unit	Terminal	Unit	Parts	Method	
8. QT deviation	1) Set tuning mode CH · SYS 4 GRP 5 Select FQT in adjustment mode. Deviation meter filter LPF : 3kHz HPF . 50Hz PTT : ON	Power meter Deviation meter Oscilloscope AF VTVM AG	Rear panel Front panel	ANT MIC			TK-940 0.75kHz (+ side) TK-941 : 0.45kHz (+ side)	±50Hz
9. DQT Deviation	1) Set tuning mode CH : SYS 4 GRP 7 Select FDQT in adjustment mode. Deviation meter filter LPF : 3kHz HPF : OFF PTT : ON						TK-940 : 0.75kHz TK-941 : 0.45kHz	±50Hz
10. Fine LTR	1) Set tuning mode CH : SYS 4 GRP 3 Select FID in adjustment mode. Deviation meter filter LPF : 3kHz HPF : OFF PTT : ON						TK-940 : 1.0kHz TK-941 : 0.75kHz	±50Hz

Adjustment Point

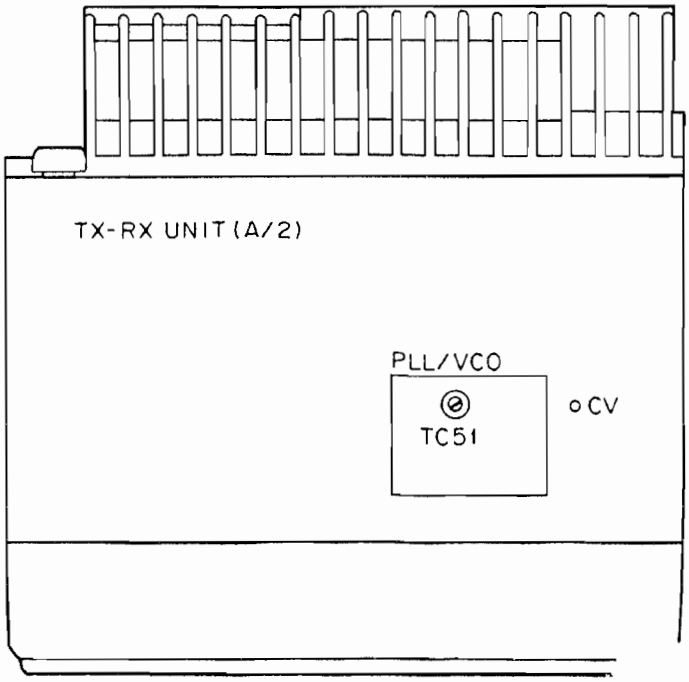

TERMINAL FUNCTION

TX-RX UNIT (X57-4590-XX) (A/2) : TX-RX section

CN No.	Pin No.	Pin name	I/O	Function
CN1 To KCT-19	1	DEO	O	Detection signal output (650mV/47kΩ).
	2	HK	I	External HOOK signal input. On hook : "L", Off hook : "H"
	3	IGN	I	Ignition input for KCT-18.
	4	DI	I	External modulation signal input.
	5	ME	–	MIC earth.
	6	MI	I/O	Internal MIC signal output, Externa MIC signal input (Standard modulation at 600Ω, 5mV).
	7	PTT	I	External PTT signal input. GND : TX, Open : RX
	8	SQ	O	Squelch signal output. Carrier in : Active "H"
CN2 TO KCT-19	1	LOK	O	Link complete signal output. Link complete : Active "L"
	2	MM	I	MIC mute signal input. Mute : "H", Unmute : Open
	3	DTC	I	Data TX group control signal input.
CN3 To KCT-19	1	LOK	O	Link complete signal output. Link complete : Active "L"
	2	RXD	I	Serial control signal input.
	3	TXD	O	Serial control signal output.
CN4 To KCT-19	1	HOR	O	Horn alert control signal output. Signal output for horn relay drive (open collector), "L" level during horn drive : max. sink current 800mA.
	2	E	–	Earth.
	3	SB	O	Power output after power switch (+13.6V±15%, 1A max.).
CN5 To INT. SP or KCT-19	1	SP	O	Output for internal/external speaker.
	2	E	–	Earth.
CN6 To Control section	1	E	–	Earth.
	2	BZ	I	Beep signal input.
	3	PSW	I	Power switch control signal input. Power switch on : 0V
	4	DI	O	External modulation signal output.
	5	DEO	O	Detection signal output.
	6	MM	O	MIC mute signal output. Mute : "H", Unmute : Open
	7	DSN	I	RX audio tone input for KDD-4.
	8	MO	I	Modulation signal input.
	9	8C	O	Common 8V output (+8V±5%).
	10	ME	–	MIC earth.
	11	MI	I/O	Internal MIC signal input, External MIC signal output.
	12	HK	O	External HOOK signal output. On hook : "L", Off hook : "H"
	13	SB	O	Power output after power switch (+13.6V±15%).
	14	KEY	I	KEY signal input. TX : "H"
	15	CK	I	Clock input for PLL/Shift register/ D-A converter.
	16	DT	I	Data input for PLL/Shift register/ D-A converter.
	17	DTC	O	Data TX group control output.
	18	LD	O	Lock detect output for PLL. Lock : "H", Unlock : "L"
	19	ES	I	Enable input for shift register.
	20	RXD	O	Serial control signal output.
	21	TXD	I	Serial control signal input.
	22	EP	I	Enable input for PLL.
	23	EN	I	Enable input for D-A converter.
	24	PTT	O	External PTT signal output. GND : TX, Open : RX
J1		EXT SP	O	Output for external speaker (4W/5% distortion).
J2		DC 13.6V	I	Power supply input (DC 13.6V±15%).
J3		ANT	I/O	Connect for ANT connector.

TX-RX UNIT (X57-4590-XX) (B/2) : Control section

CN No.	Pin No.	Pin name	I/O	Function
CN201 To TX-RX section	1	E	–	Earth.
	2	BZ	O	Beep signal output.
	3	PSW	O	Power switch control signal output. Power switch on : 0V
	4	DI	I	External modulation signal input.
	5	DEO	I	Detection signal input.
	6	MM	I	MIC mute signal input. Mute : "H", Unmute : Open
	7	DSN	O	RX audio tone output for KDD-4.
	8	MO	O	Modulation signal output.
	9	8C	I	Common 8V input (+8V±5%).
	10	ME	–	MIC earth.
	11	MI	I/O	Internal MIC signal output, External MIC signal input.
	12	HK	I	External HOOK signal input. On hook : "L", Off hook : "H"
	13	SB	I	Power input after power switch (+13.6V ±15%).
	14	KEY	O	KEY signal output. TX : "H"
	15	CK	O	Clock output for PLL/Shift register/ D-A converter.
	16	DT	O	Data output for PLL/Shift register/ D-A converter.
	17	DTC	I	Data TX group control signal input.
	18	LD	I	Lock detect input for PLL. Lock : "H", Unlock : "L"
	19	ES	O	Enable output for shift register.
	20	RXD	I	Serial control signal input.
	21	TXD	O	Serial control signal output.
	22	EP	O	Enable output for PLL.
	23	EN	O	Enable output for D-A converter.
	24	PTT	I	External PTT signal input. GND : TX, Open : RX
CN203 To KDD-4	1	DBD	I	Dead beat disable input.
	2	RST	I	Reset signal input.
	3	E	–	Earth.
	4	DSN	O	RX audio tone output.
	5	PT	O	Transpond PTT signal output. GND : TX, Normally 5V
	6	MT	O	Decode latch signal output. Code match : Active "L"
	7	8C	I	Common 8V input (+8V±5%).
	8	TON	O	TX audio tone output.
	9	NC	–	Not use.

TERMINAL FUNCTION

CN No.	Pin No.	Pin name	I/O	Function
CN205	1	8C	O	Common 8V output (+8V±5%).
	2	BZ	I	Beep signal input.
To	3	PSW	I	Power switch control signal input.
Display				Power switch on : 0V
section	4	RS	O	Reset signal output for display.
	5	E	–	Earth.
	6	MTX	O	Serial control signal output for display.
	7	MRX	I	Serial control signal input for display.
	8	PTT	I/O	PTT signal output, Serial data input/output
	9	HK	I/O	Hook signal output, Serial data input/output.
J201	1	SB	O	Power output after power switch
				(+13.6V±15%, 200mA max.).
To	2	E	–	Earth.
MIC	3	PTT	I/O	PTT signal input (GND : TX, Open : RX).
jack				Serial data input/output.
	4	ME	–	MIC earth.
	5	MI	I	MIC signal input.
				(Standard modulation at 600Ω, 5mV)
	6	HK	I/O	Hook signal input.
				On hook : "L", Off hook : "H"
				Serial data input/output.

CN No.	Pin No.	Pin name	I/O	Function
PLL/VCO (X58-4170-XX) : Sub unit				
CN1	1	EP	I	Enable input for PLL.
	2	CK	I	Clock input for PLL.
	3	DT	I	Data input for PLL.
	4	RE	I	VCXO 12.8MHz input for PLL.
	5	5C	I	Common 5V input (+5V±5%).
	6	LD	O	Lock detect output for PLL.
				Lock : "H", Unlock : "L"
	7	8C	I	Common 8V input (+8V±5%).
CN2	1	VO	O	VCO signal output.
	2	E	–	Earth.
	3	8V	I	8V input for VCO.
	4	MD	I	Modulation signal input.
	5	CV	O	PLL lock voltage output.
LCD ASSY (B38-0731-05) : Display section				
CN1	1	HK	I/O	Hook signal input, Serial data input/output.
	2	PTT	I/O	PTT signal input, Serial data input/output.
To	3	MRX	O	Serial control signal output for display.
Control	4	MTX	I	Serial control signal input for display.
section	5	E	–	Earth.
	6	RST	I	Reset signal input for display.
	7	PSW	O	Power switch control signal output.
				Power switch on : 0V
	8	BZ	O	Beep signal output.
	9	8C	I	Common 8V input (+8V±5%).

SPECIFICATIONS

Item	TK-940	TK-941
GENERAL		
Frequency Range	RX : 851~870MHz TX . 806~825MHz, 851~870MHz	RX : 935~941MHz TX : 896~902MHz, 935~941MHz
System	32 systems max.	
Group	250 groups max.	
Conventional Channels	308	
Channel Spacing	25kHz (PLL step 12.5kHz)	12.5kHz
Input Voltage	13.6V DC negative ground	
Current Drain	Less than 0.4A on standby Less than 1.0A on receive Less than 7.0A on transmit	
Duty Cycle	Receiver 100% Transmitter 20%	
Temperature Range	–30°C to +60°C (–22°F to +140°F)	
Dimensions & Weight	5.51" (140mm) W x 1.58" (40mm) H x 5.32" (135mm) D 950g	
RECEIVER (Measurement made per EIA standard EIA-204-C)		
RF Impedance	50Ω	
Sensitivity (EIA 12dB SINAD)	0.25μV	
Modulation Acceptance	±7kHz	±3.5kHz
Selectivity	–75dB	–68dB
Intermodulation	–70dB	–65dB
Spurious & Image Rejection (Excepts 1/2 IF)	–75dB	
Channel Frequency Spread	19MHz	6MHz
Audio Power Output	4W at less than 5% distortion	
TRANSMITTER (Measurement made per EIA standard EIA-152-B)		
RF Power Output	15W	
RF Output Impedance	50Ω	
Spurious & Harmonics	–60dB	
Modulation	F3E, F1D, F2D	
FM Noise	–45dB	–40dB
Microphone Impedance	Low impedance	
Audio Distortion	Less than 3% at 1000Hz	Less than 5% at 1000Hz
Frequency Stability (–30°C to +60°C)	±0.00025%	±0.00015%
Channel Frequency Spread	64MHz	45MHz

Applicable MIL standard			
	MIL 810C Methods/Procedures	MIL 810D Methods/Procedures	MIL 810E Methods/Procedures
Dust	510.1/Procedure 1	510.2/Procedure 1	510.3/Procedure 1
Vibration	514.2/Procedure 8, 10	514.3/Procedure 1	514.4/Procedure 1
Shock	516.2/Procedure 1, 2, 3, 5	516.3/Procedure 1, 3, 4, 5, 6	516.4/Procedure 1, 3, 4, 5, 6

Applicable environmental EIA standards
EIA 152C, 204C : Shock, Vibration Humidity

KCT-19 (ACCESSORY CONNECTION CABLE) / KDD-4 (DTMF DECODER) / KPG-25D (PROGRAMMING DISK)

KDD-4 External View

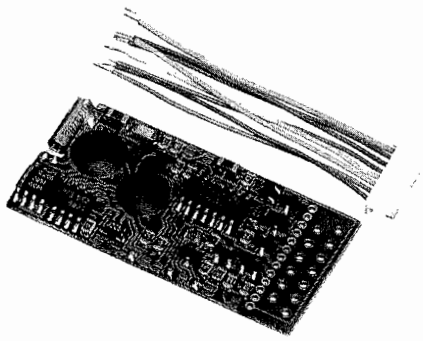

KCT-19 External View

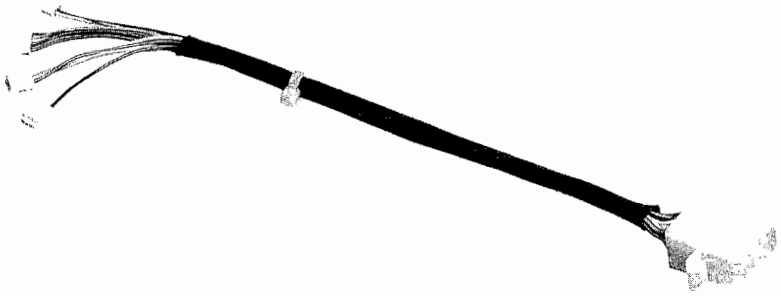

KPG-25D External View

KENWOOD CORPORATION

14-6, Dogenzaka 1-chome, Shibuya-ku, Tokyo 150, Japan

KENWOOD SERVICE CORPORATION
P.O. BOX 22745, 2201 East Dominguez Street, Long Beach, CA 90801-5745, U.S.A.

KENWOOD ELECTRONICS DEUTSCHLAND GMBH
Rembrücker Str 15, 6056 Heusenstamm, Germany

KENWOOD ELECTRONICS BENELUX N.V.
Mechelsesteenweg 418 B-1930 Zaventem, Belgium

TRIO-KENWOOD FRANCE S.A.
13, Boulevard Ney, 75018 Paris, France

TRIO-KENWOOD U.K. LIMITED
KENWOOD House, Dwight Road, Watford, Herts., WD1 8EB United Kingdom

KENWOOD ELECTRONICS NEDERLAND B.V.
Amsterdamseweg 35, 1422 AC Uithoorn, The Netherlands

KENWOOD ELECTRONICS ITALIA S.p.A.
Via G. Sirtori, 7/9 20129 Milano, Italy

KENWOOD ESPAÑA S.A.
Bolivia, 239-08020 Barcelona, Spain

KENWOOD ELECTRONICS AUSTRALIA PTY. LTD.
(A.C.N. 001 499 074)
P.O. Box 504, 8 Figtree Drive, Australia Centre, Homebush, N.S.W. 2140, Australia

KENWOOD & LEE ELECTRONICS, LTD.
Unit 3712-3724, Level 37, Tower one Metroplaza, 223 Hing Fong Road, Kwai Fong, N.T., Hong Kong

KENWOOD ELECTRONICS CANADA INC.
6070 Kestrel Road, Mississauga, Ontario, Canada L5T 1S8

LCD ASSY (B38-0731-05)
Component side view

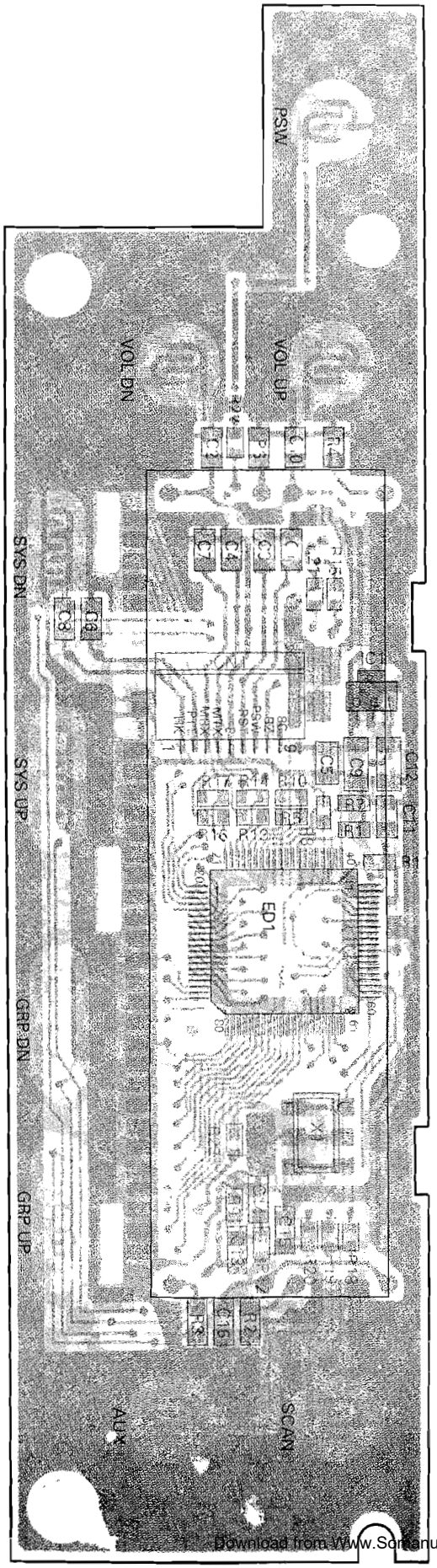

LCD ASSY (B38-0731-05)
Foil side view

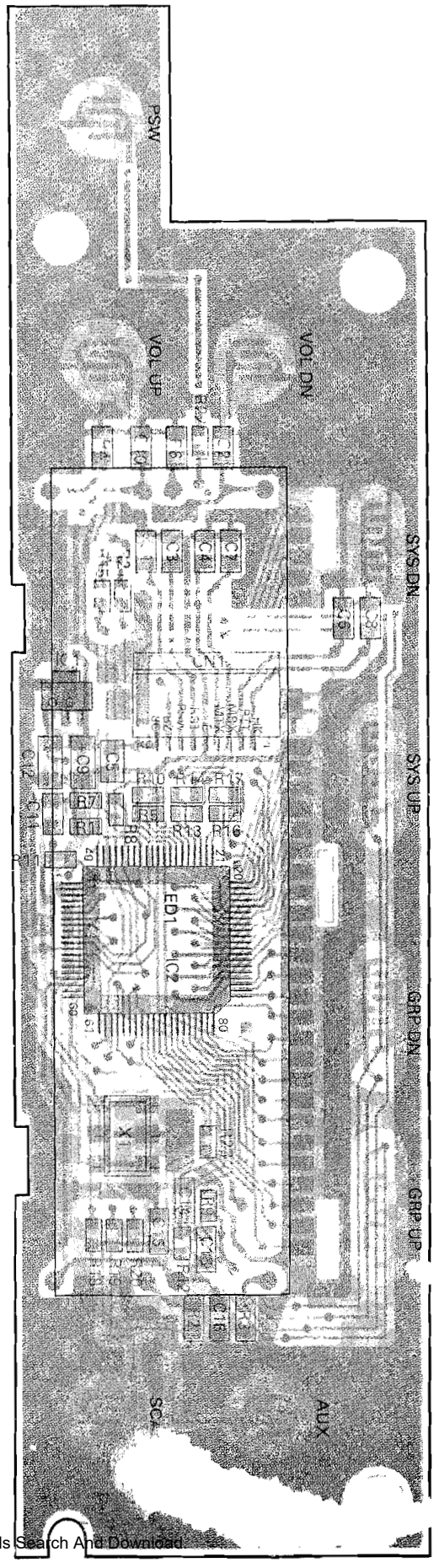

PLL/VCO (X58-4170-XX) (A/2) -10 : TK-940 -11 : TK-941
Component side view

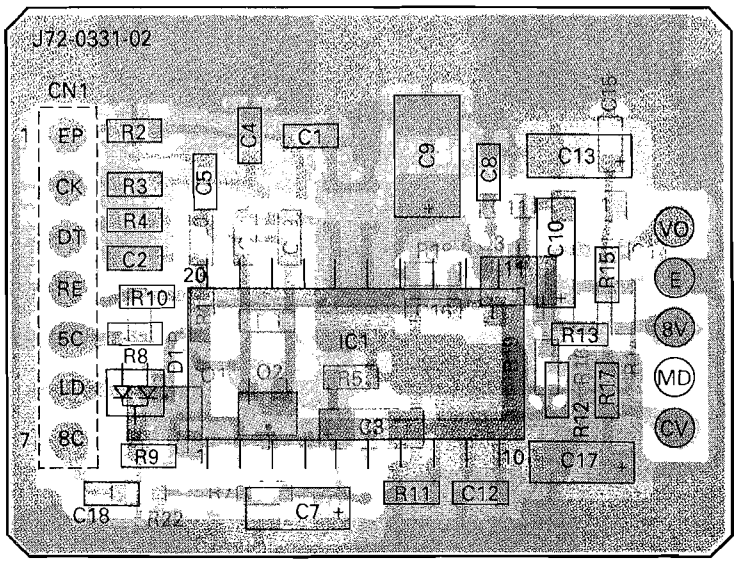

DTC143EK
2SA1586
2SC3356

2SK508NV

NJM78L05UA

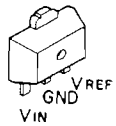

PLL/VCO (X58-4170-XX) (A/2) Foil side view

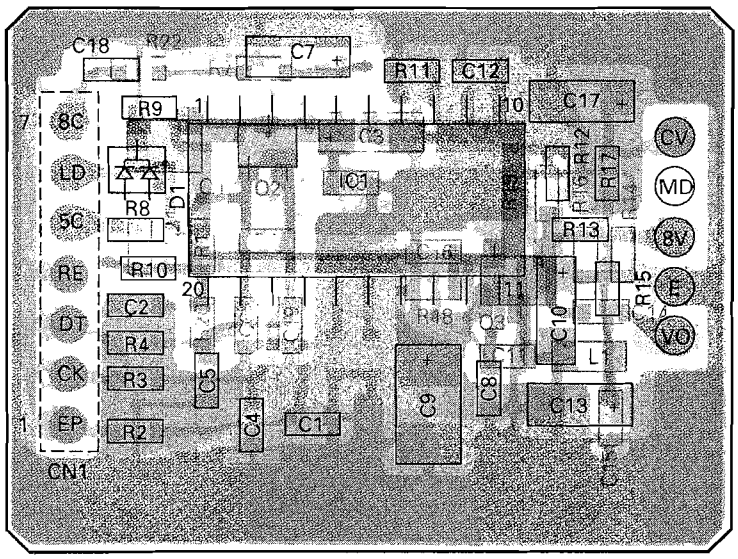

MC145190F-K
SC370651F

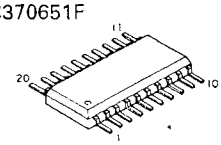

75308BGK740BE9

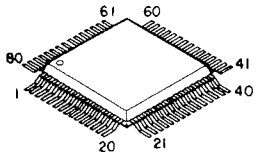

PLL/VCO (X58-4170-XX) (B/2) Foil side view

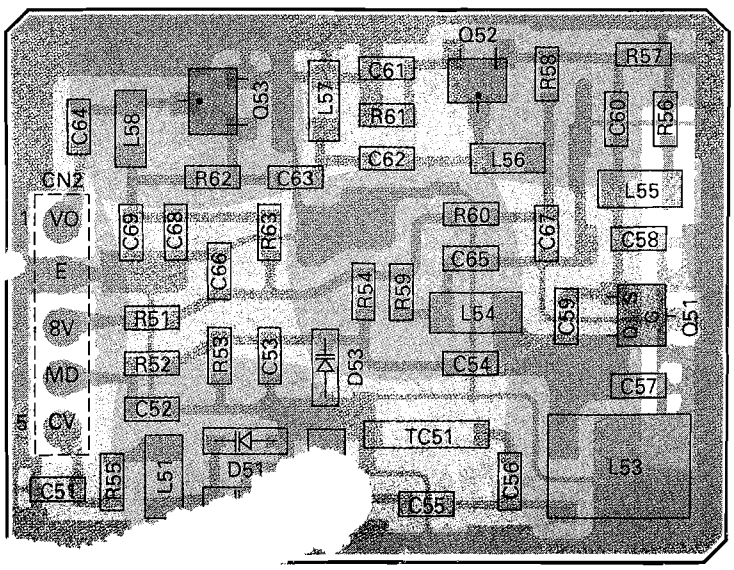

Component side
Pattern 1
Pattern 2
Foil side

TK-940/941 PC BOARD VIEWS

TX-RX UNIT (X57-4590-XX) (B/2) Component side view -10 : TK-940 -11 : TK-941

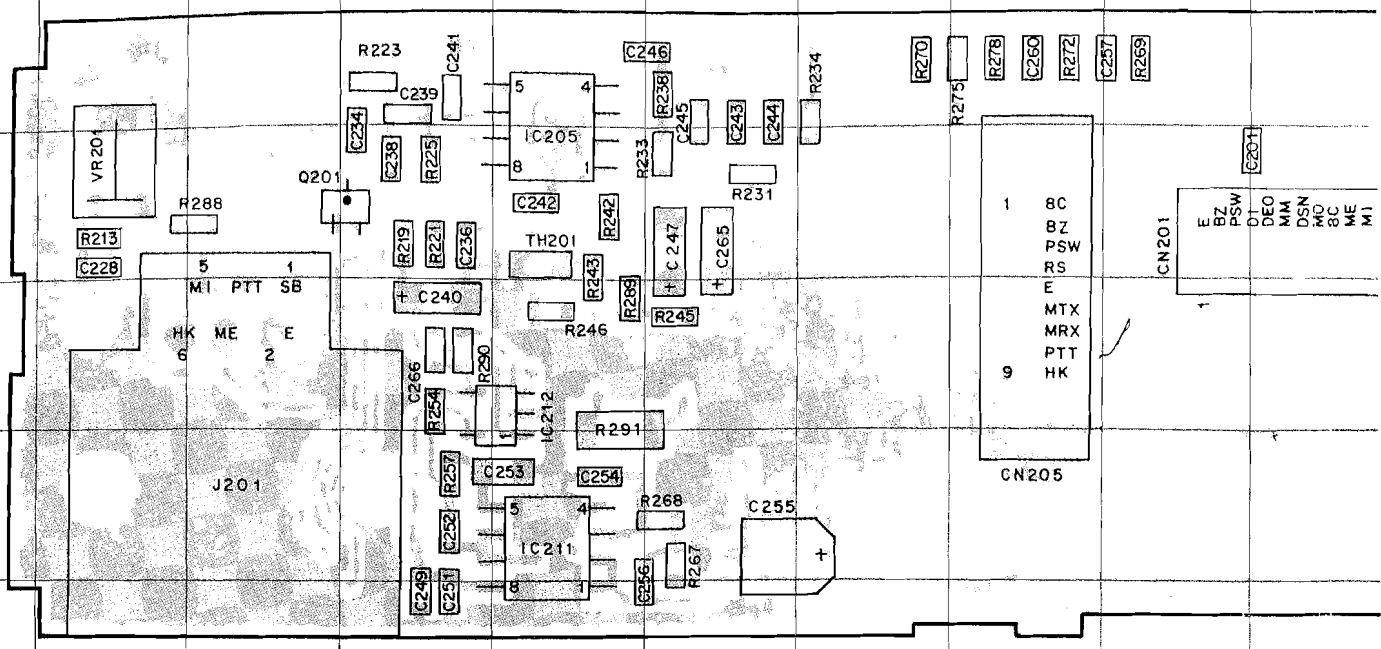

TX-RX UNIT (X57-4590-XX) (B/2) Foil side view -10 : TK-940 -11 : TK-941

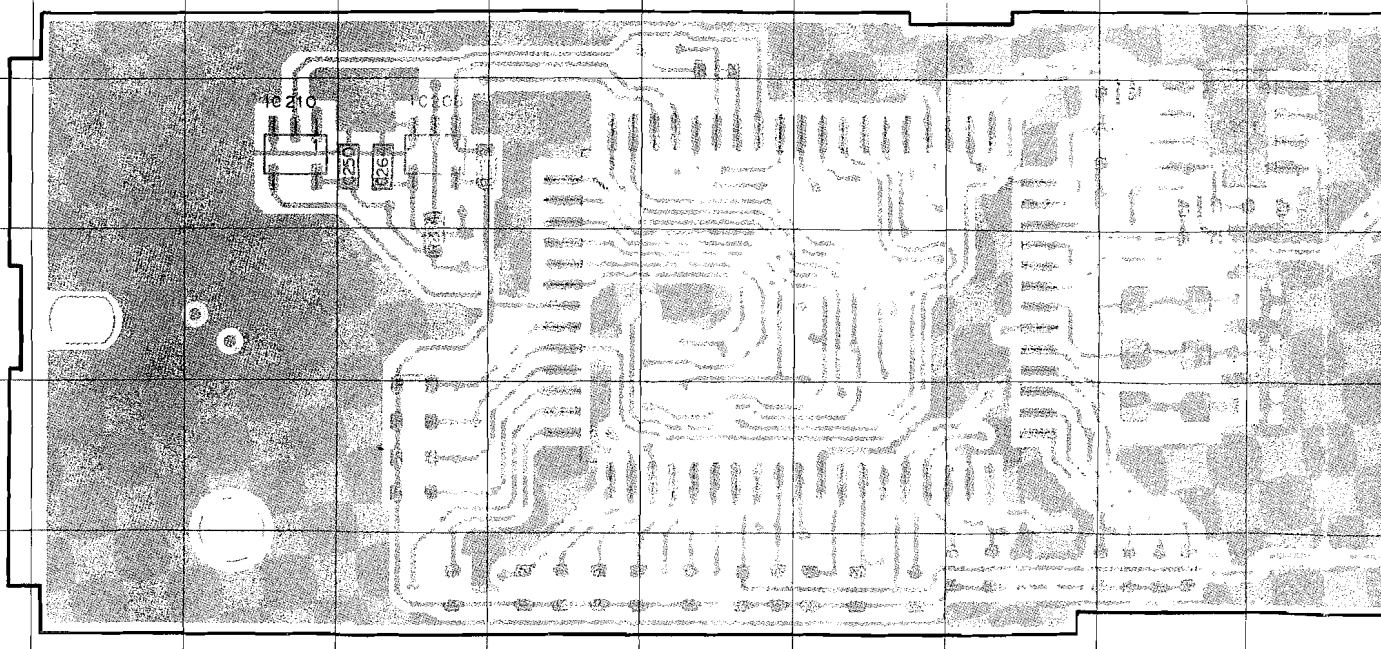

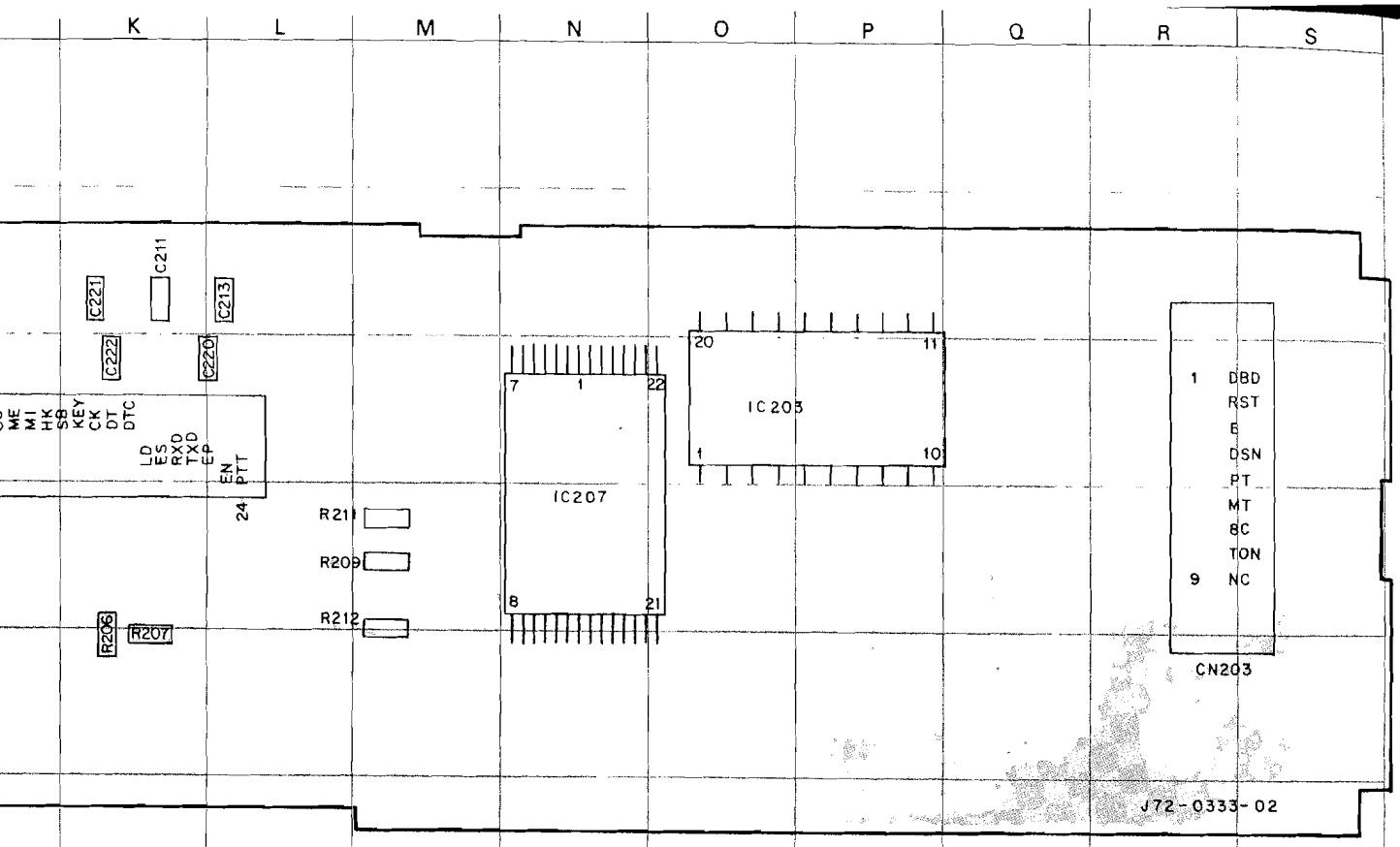

Ref. No.	Address
IC203	3P
IC205	3E
IC207	4N
IC211	5E
IC212	4E
Q201	3D

Component side

Pattern 1
Pattern 2
Pattern 3
Pattern 4

Foil side

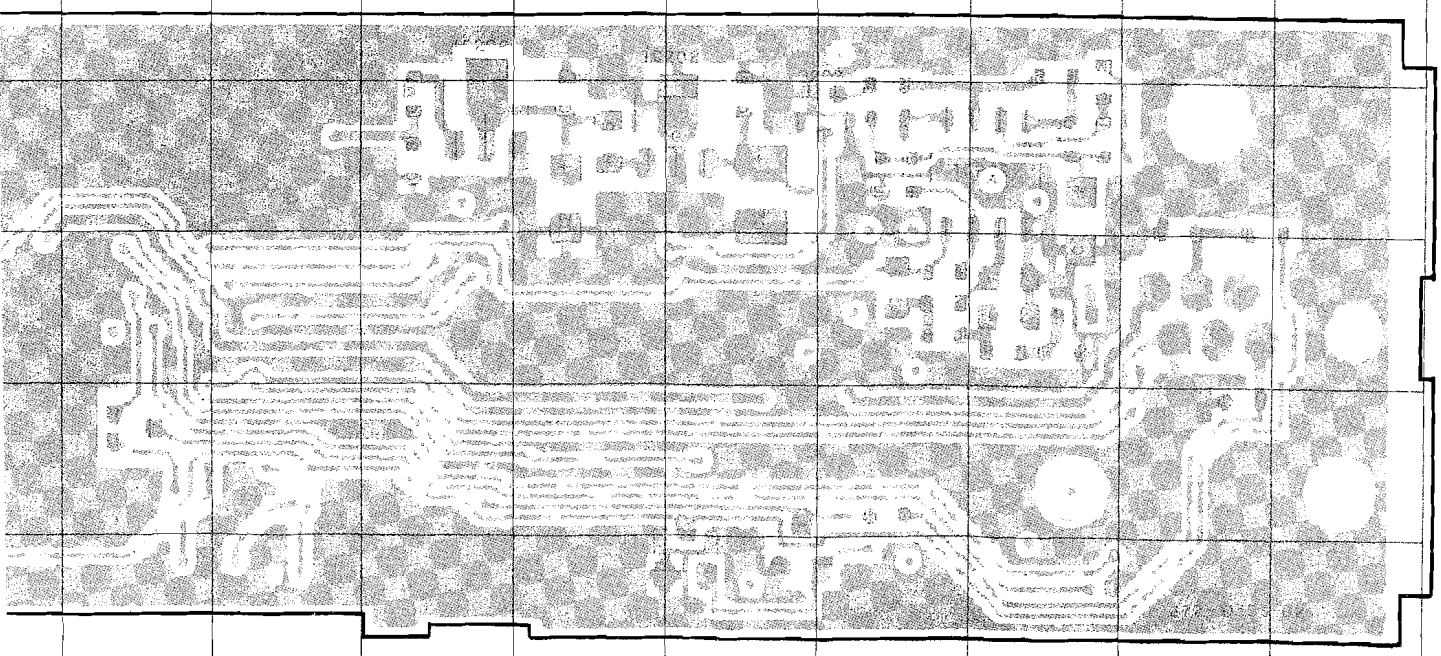

Ref. No.	Address	Ref. No.	Address
IC201	9I	IC210	9C
IC202	9O	Q202	9P
IC204	9G	Q201	12O
IC206	9F	Q202	12O
IC208	9	203	11K
IC209	10		

Component side

Pattern 1
Pattern 2
Pattern 3
Pattern 4

Foil side

TX-RX UNIT (X57-4590-XX) (B/2) Component side view -10 : TK-940 -11 : TK-941

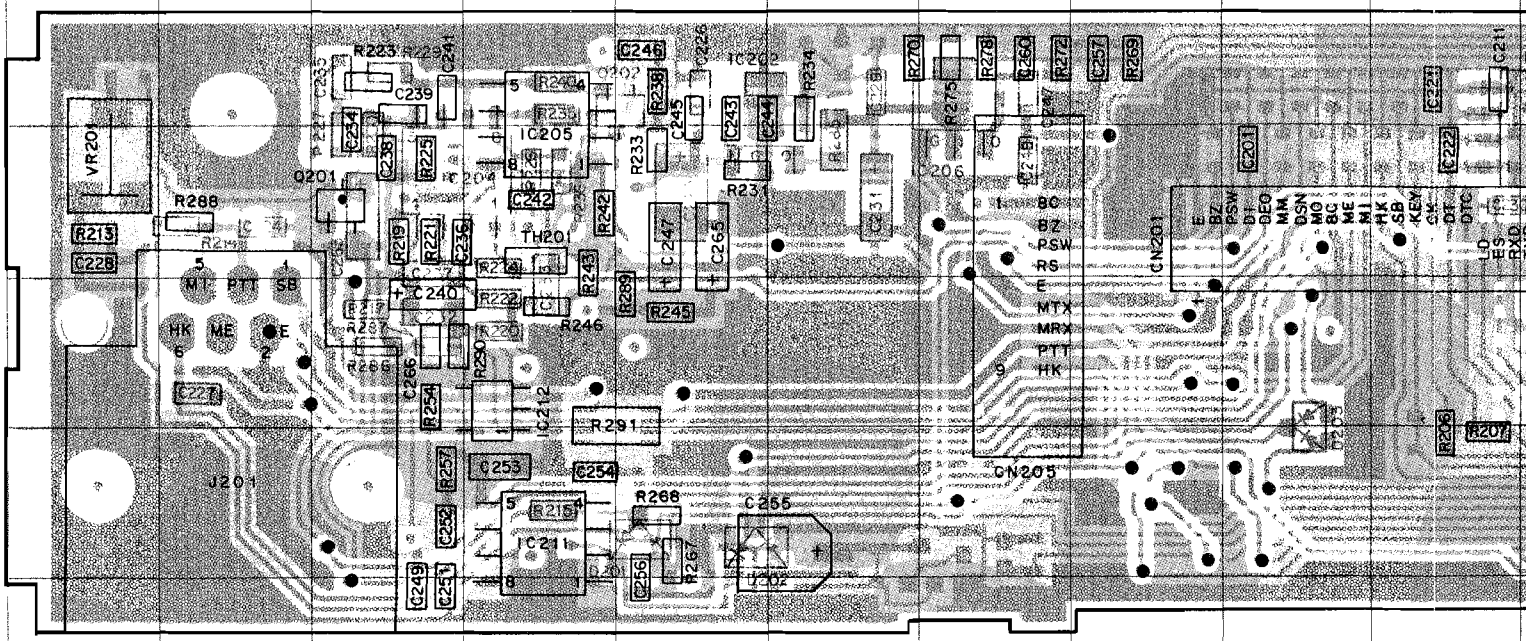

Ref. No
IC201
IC202
IC203
IC204
IC205
IC206

78312AGF3563BE

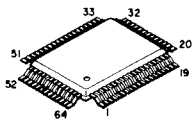

AT24C02N10SI2.7

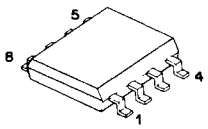

AT29C256-20TI

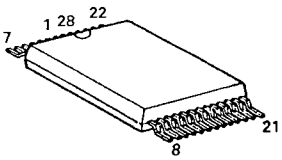

HD74HC373FP

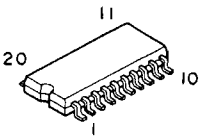

S-8054ALB-LM-T1

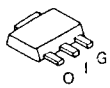

PC BOARD VIEW TK-940/941

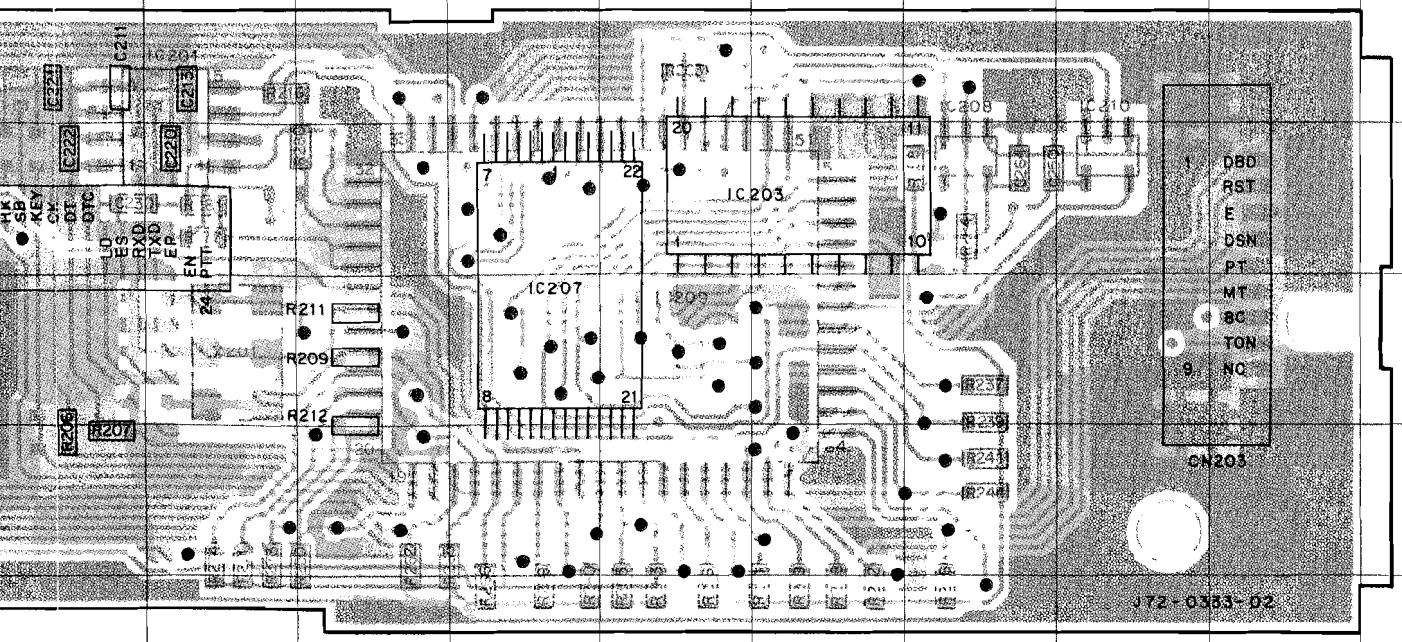

Ref. No.	Address	Ref. No.	Address	Ref. No.	Address
IC201	2K	IC207	4M	Q201	3C
IC202	2E	IC208	3P	Q202	2E
IC203	3O	IC209	4N	D201	5E
IC204	3C	IC210	3Q	D202	5E
IC205	3D	IC211	5D	D203	5I
IC206	2G	IC212	4D		

● Connect 1 and 4

Component side

Pattern 1
Pattern 2
Pattern 3
Pattern 4

Foil side

M-T1

TA75S01F
TC7S04F
TC7S32F

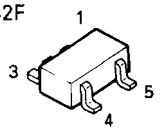

DTC114EU
DTC144EU

NJM4558E

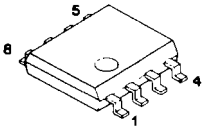

NJM78L05UA

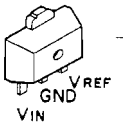

TK-940/941 PC BOARD VIEW

TX-RX UNIT (X57-4590-XX) (A/2) Component side view -10 : TK-940 -11 : TK-941

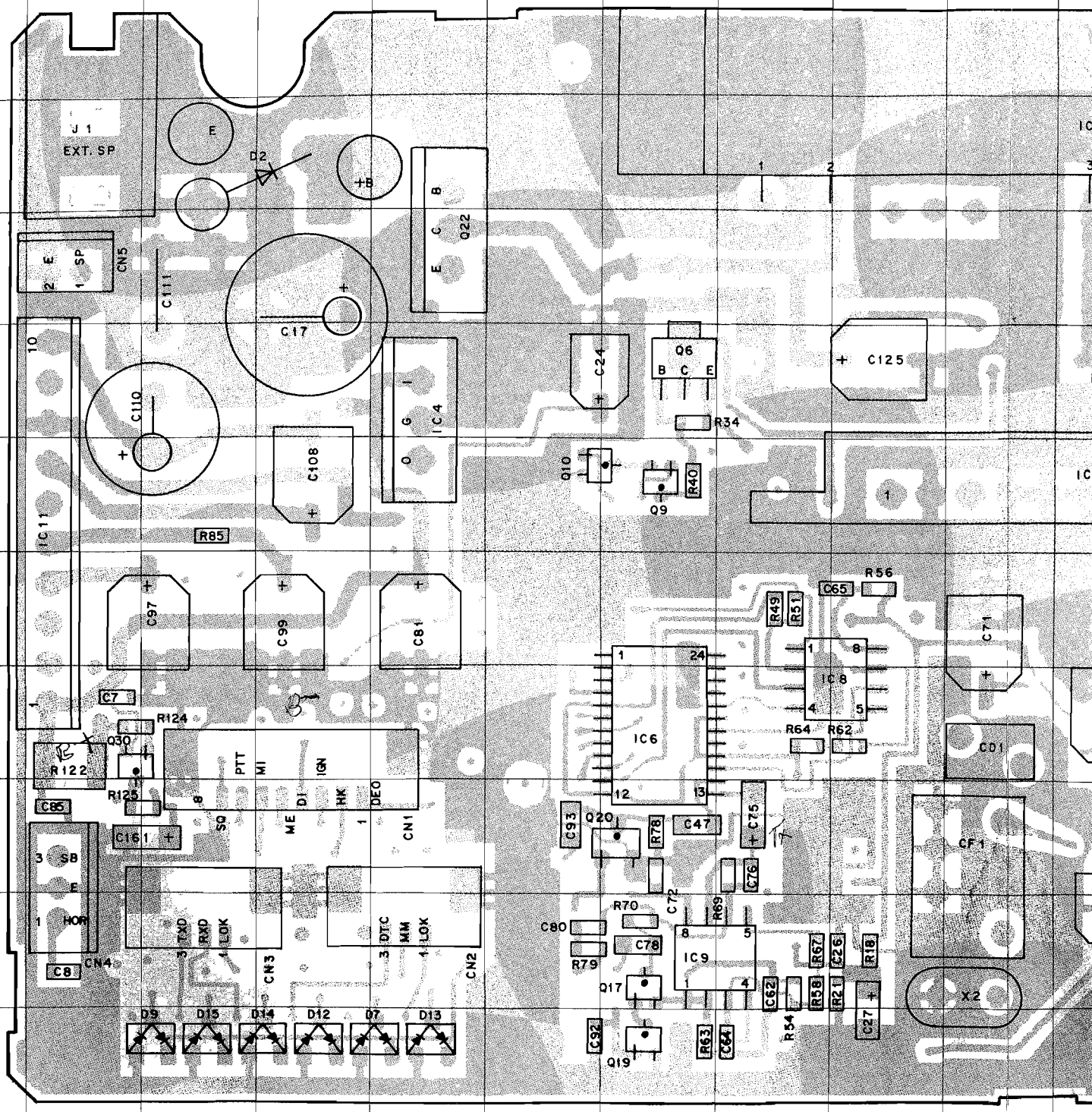

Component side

Pattern 1
Pattern 2
Pattern 3
Pattern 4

Foil side

Ref. No.	Address	Ref. No.	Address	Ref. No.	Address
IC4	5E	Q6	5G	D2	3D
IC6	8G	Q9	6G	D7	11E
IC8	8I	Q10	6F	D9	11C
IC9	10H	Q17	10G	D12	11D
IC11	6B	Q19	11G	D13	11E
IC12	6K	Q20	9G	D14	11D
IC14	3K	Q22	4E	D15	11
		Q30	8B		

3SK241

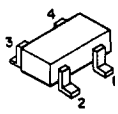

BU4013BF

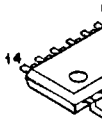

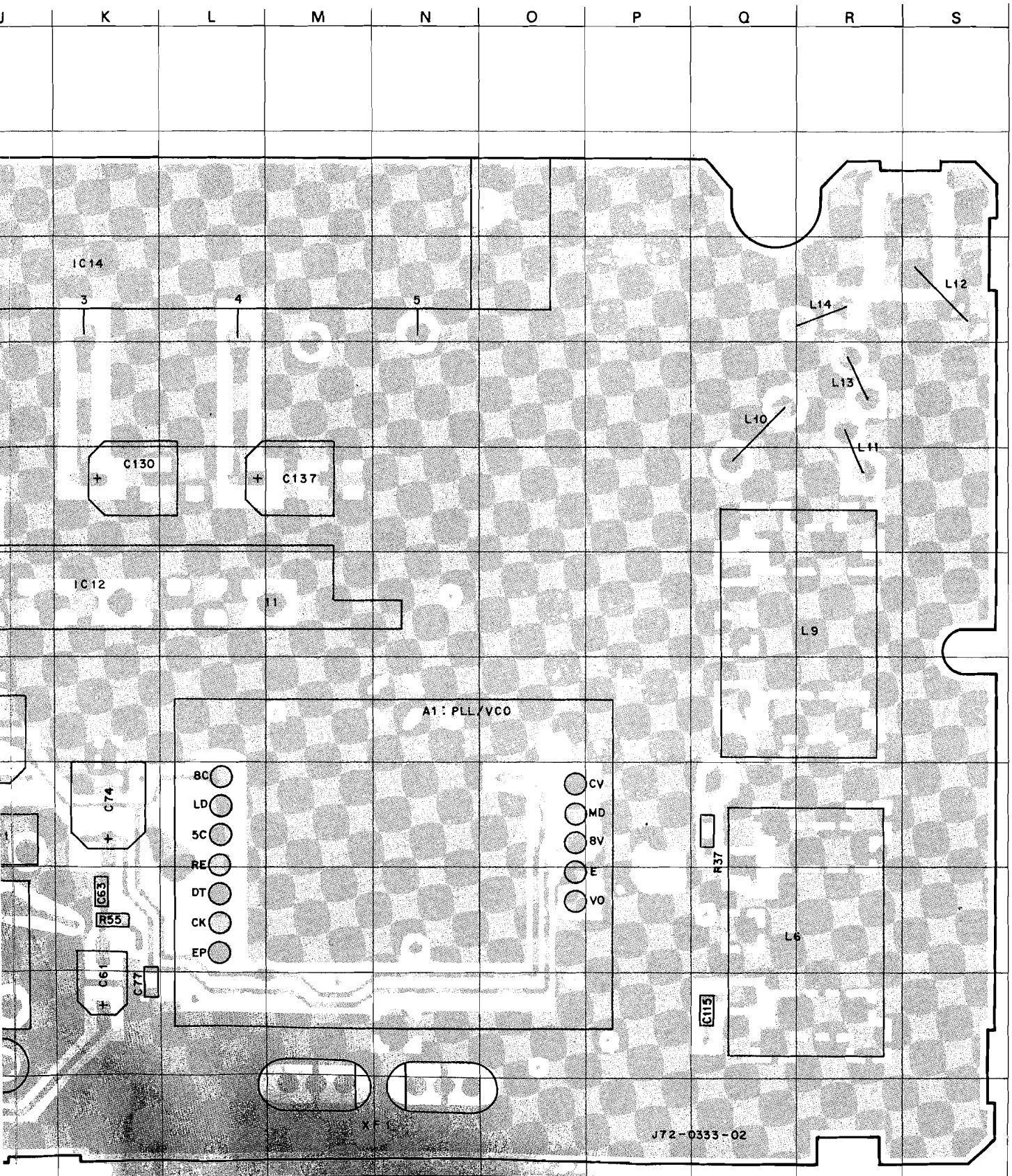

BU4013BF

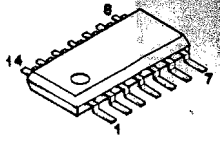

LA4422

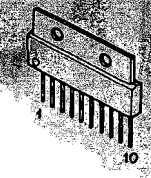

MC3372V
XRU4094BCF

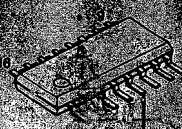

2SA1641

DTA114EU DTC314TK
DTA114TU 2SA1362
DTA114YU 2SA1586
DTA144EU 2SC4116
DTC114EU 2SC4215
DTC114YU 2SC4226
DTC144EU

2SB1188
2SD1624

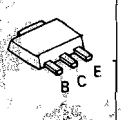

TX-RX UNIT (X57-4590-XX) (A/2) Foil side view -10 : TK-940 -11 : TK-941

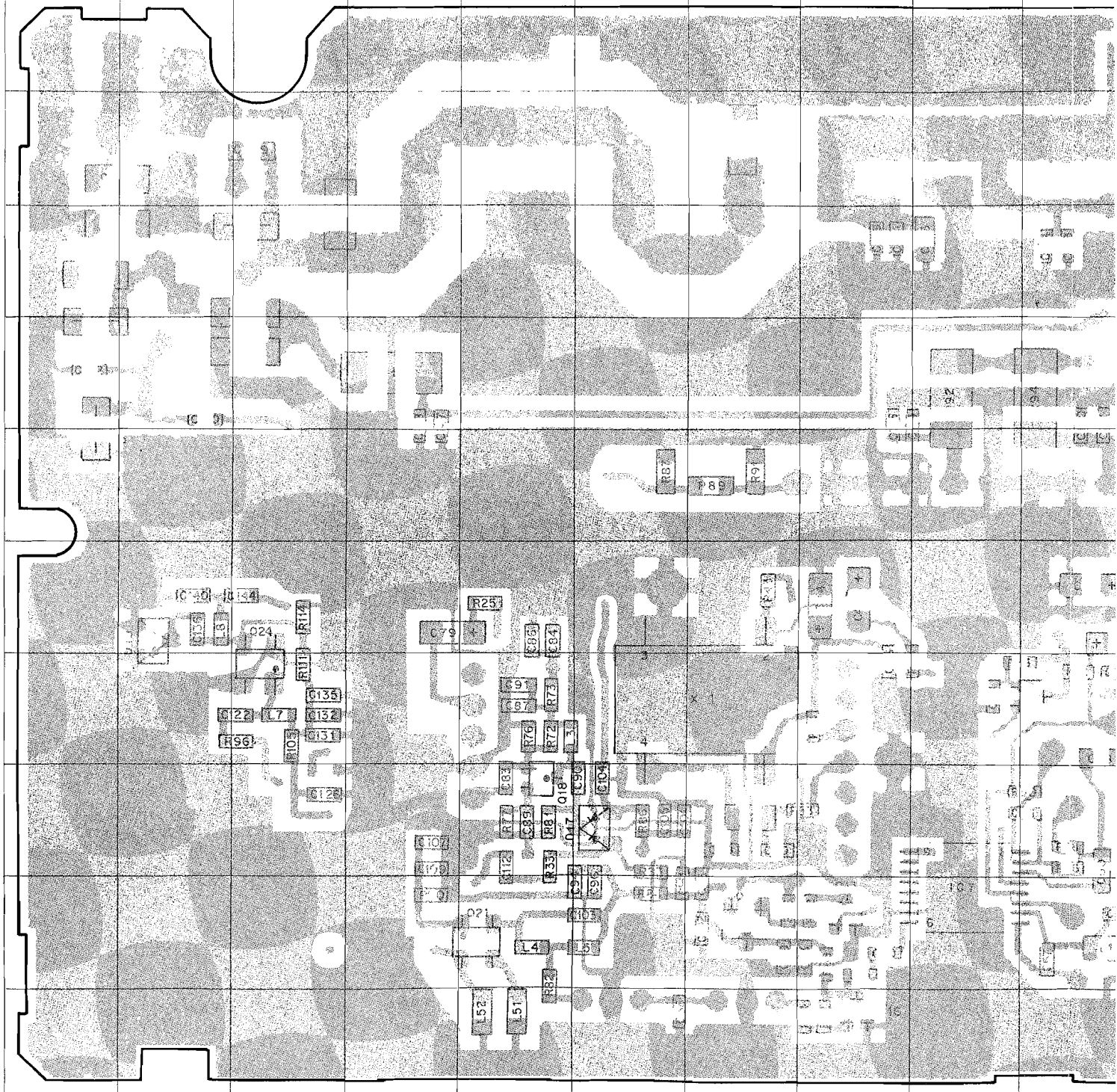

Component side

Pattern 1
Pattern 2
Pattern 3
Pattern 4

Foil side

Ref. No.	Address	Ref. No.	Address	Ref. No.	Address	Ref. No.	Address	Ref. No.	Address
IC1	7P	Q3	5Q	Q15	8J	Q28	7O	D18	7B
IC2	10K	Q4	6P	Q16	11H	Q29	9O	D19	5A
IC3	7K	Q5	7P	Q18	9E	D1	6Q	D20	4C
IC5	10M	Q7	5L	Q[illegible]	10E	D4	7R	D21	5A
IC7	10I	Q8	10G	Q[illegible]	3N	D8	8O	D22	7O
IC10	[illegible]L	Q[illegible]	10H[illegible]		8C	D10	8P		
IC13	5M	Q12		Q25	5M	D11	8O		
Q1	6Q	Q13		Q26	5M	D16	9Q		
Q2	5Q	Q14	8Q	Q27	7O	D17	9F		

2SB1

PC BOARD VIEW TK-940/941

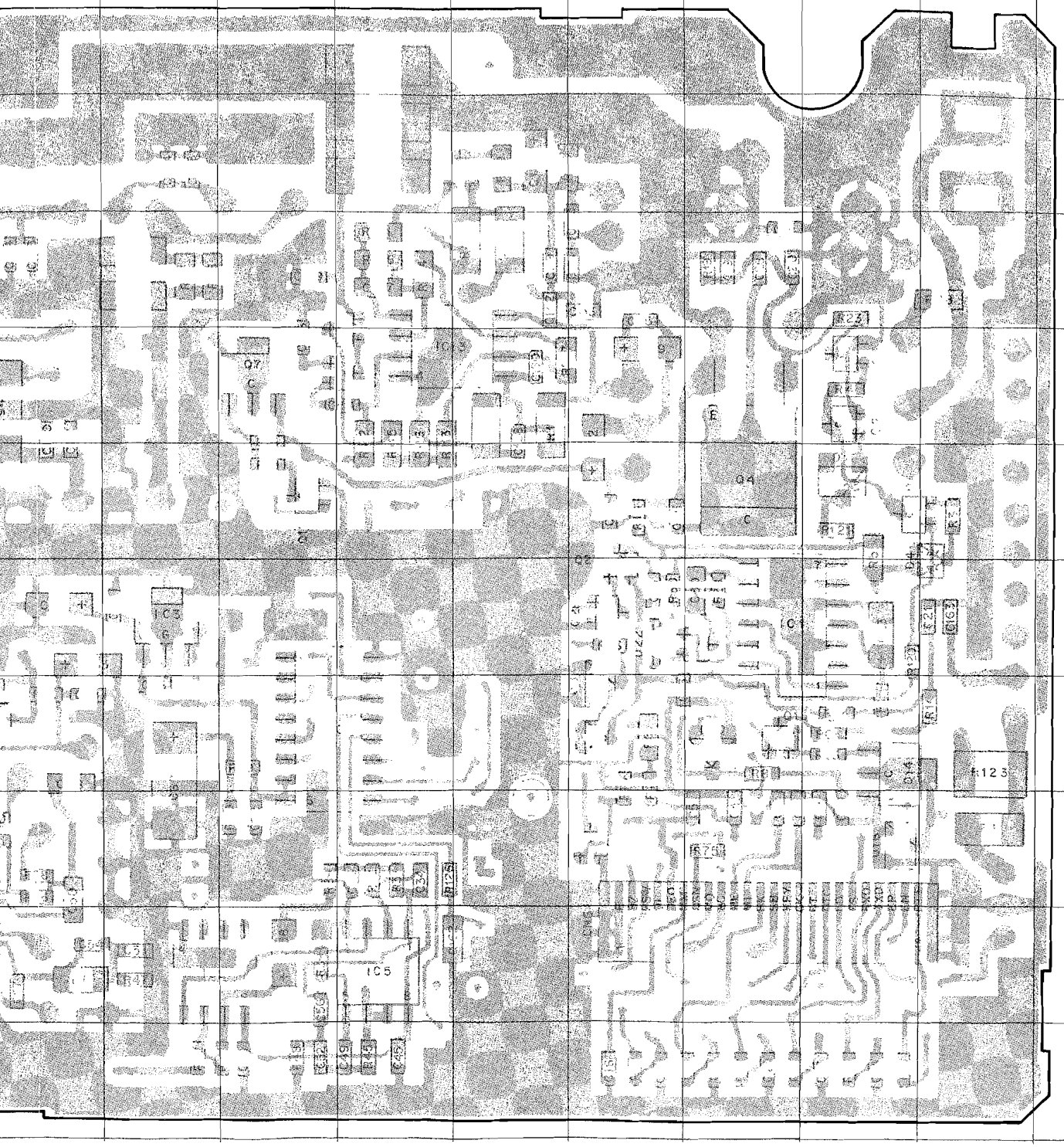

2SB1370

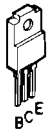

NJM2904M
NJM4558E

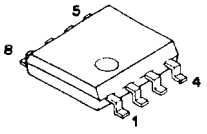

µPC7808H

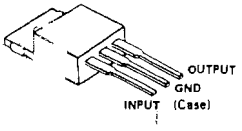

NJM78L05UA

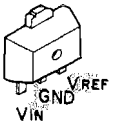

M62363FP

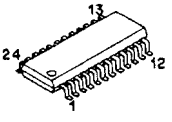

2SC4094

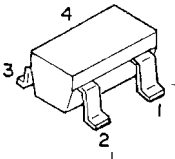

TK-940/941 PC BOARD VIEW

TX-RX UNIT (X57-4590-XX) (A/2) Component side view -10 : TK-940 -11 : TK-941

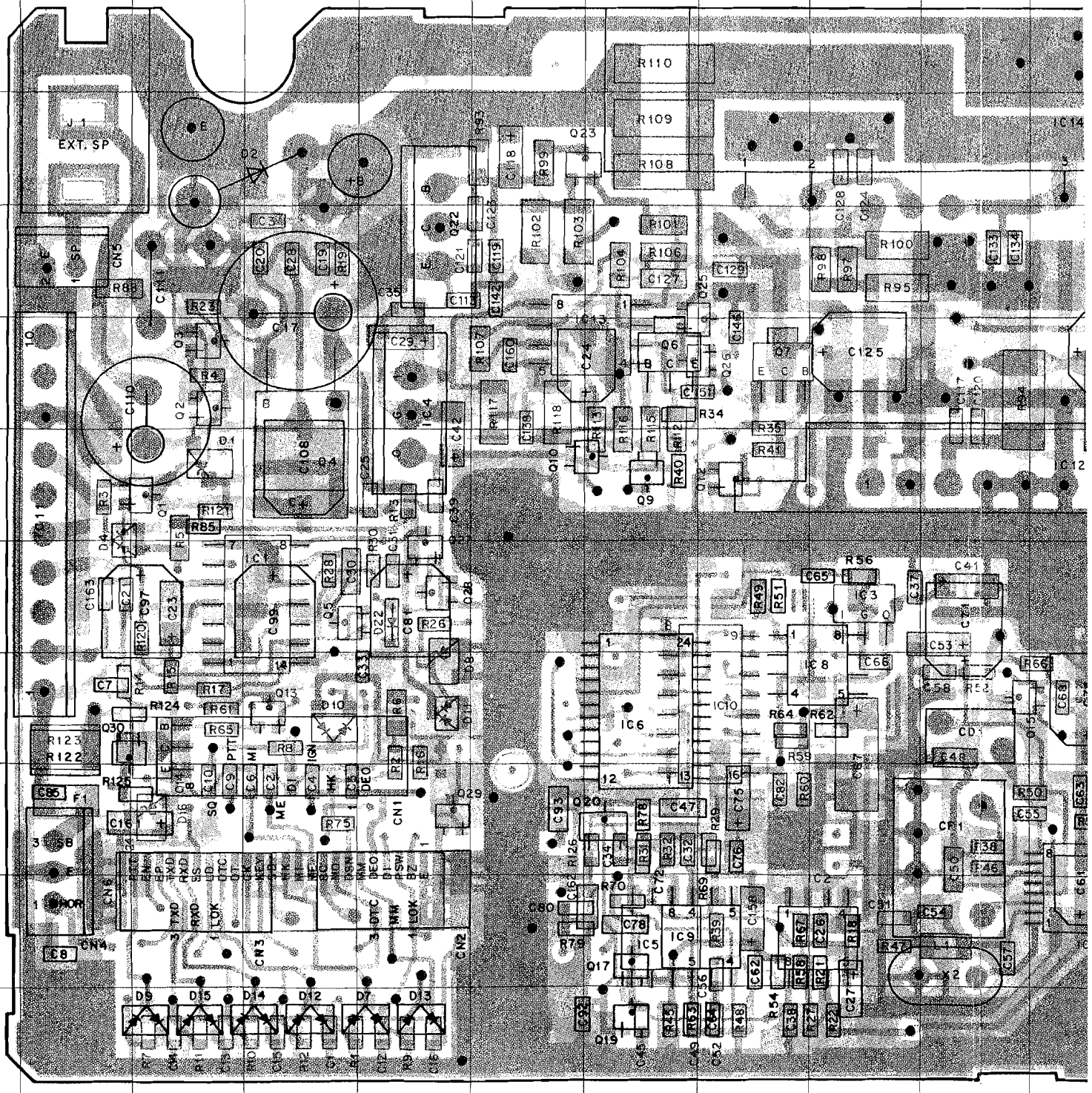
EXT. SP
J 1
D2
CN5
CN1
CN2
CN3
CN4
CN6
IC1
IC3
IC6
IC8
IC9
IC10
Q4
Q9
Q17
Q19
Q20
Q29
D9
D15
D14
D12
D7
D13
R110
R109
R108
R101
R100
R95
R34
R35
R41
R56
R64
R62
R59
R75
R85
R121
R124
R122
R123
R65
R61
R17
R8
R6
R16
R26
R28
R3
R4
R5
R7
R14
R13
R40
R51
R49
R50
R63
R66
R52
R46
R38
R27
R22
R48
R45
R43
R54
R67
R56
R21
R18
R39
R69
R70
R78
R79
R80
R82
R60
R32
R31
R33
R76
R75
R47
R46
R38
R50
R53
R54
R57
R61
R63
R68
C125
C127
C128
C124
C133
C134
C148
C155
C158
C160
C118
C119
C142
C121
C122
C125
C24
C42
C41
C37
C53
C58
C66
C65
C68
C54
C31
C59
C62
C76
C75
C47
C78
C80
C81
C93
C98
C97
C23
C163
C161
C86
C8
C7
C10
C11
C20
C28
C19
C34
C35
C29
C40
C33
C22
C25
C26
C27
C36
C64
C52
C49
C45
C16
C15
C12
C7
C14
C11
C9
C10
C6
C2
C4
C5
C3
C1
C8
C13
C16
C14
C9
C6
C2
C4
C5
C3
C1
C8
C13
C16
R1
R11
R15
R10
R12
R7
R14
R16
R9
R8
R6
R5
R4
R3
R2
R1
R7
R11
R15
R10
R12

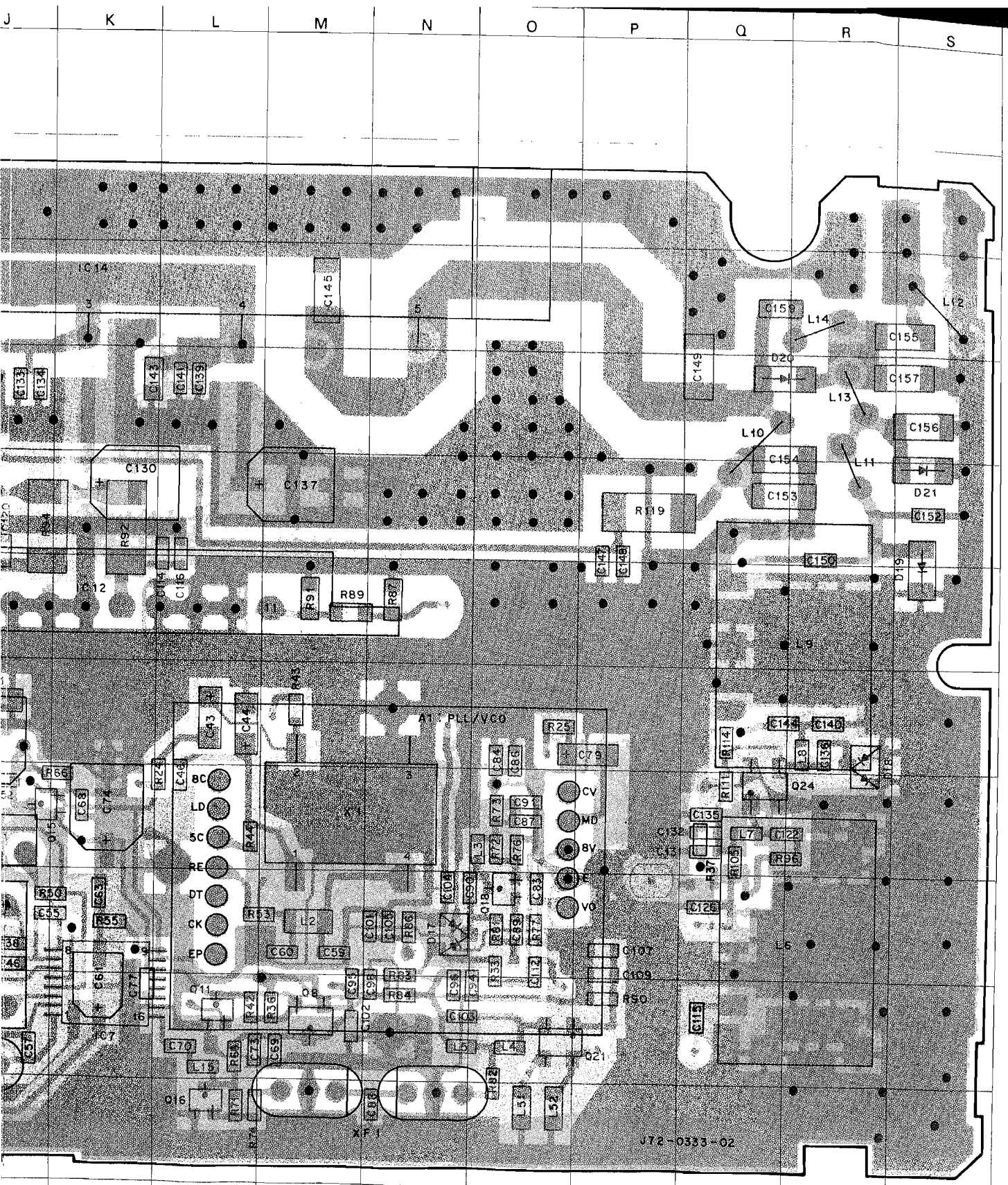

Ref. No.	Address	Ref. No.	Address	Ref. No.	Address	Ref. No.	Address
Q14	8C	Q23	3F	D2	3D	D14	11D
Q15	8J	Q24	8Q	D4	[illegible]	D15	11C
Q16	11L	Q25	4G	D7	[illegible]	[illegible]	9C
Q17	10G	Q26	5H	D8	[illegible]	[illegible]	9N
Q18	9O	Q27	7E	D9	11C	[illegible]	7R
Q19	11G	Q28	7E	D10	8D	[illegible]	6S
Q20	9G	Q29	9E	D11	8E	D20	4Q
Q21	10O	Q30	8C	D12	11D	D21	5S
Q22	4E	D1	6C	D13	11E	D22	7E

Note) ● Ref. No. : Parts of pattern 1.

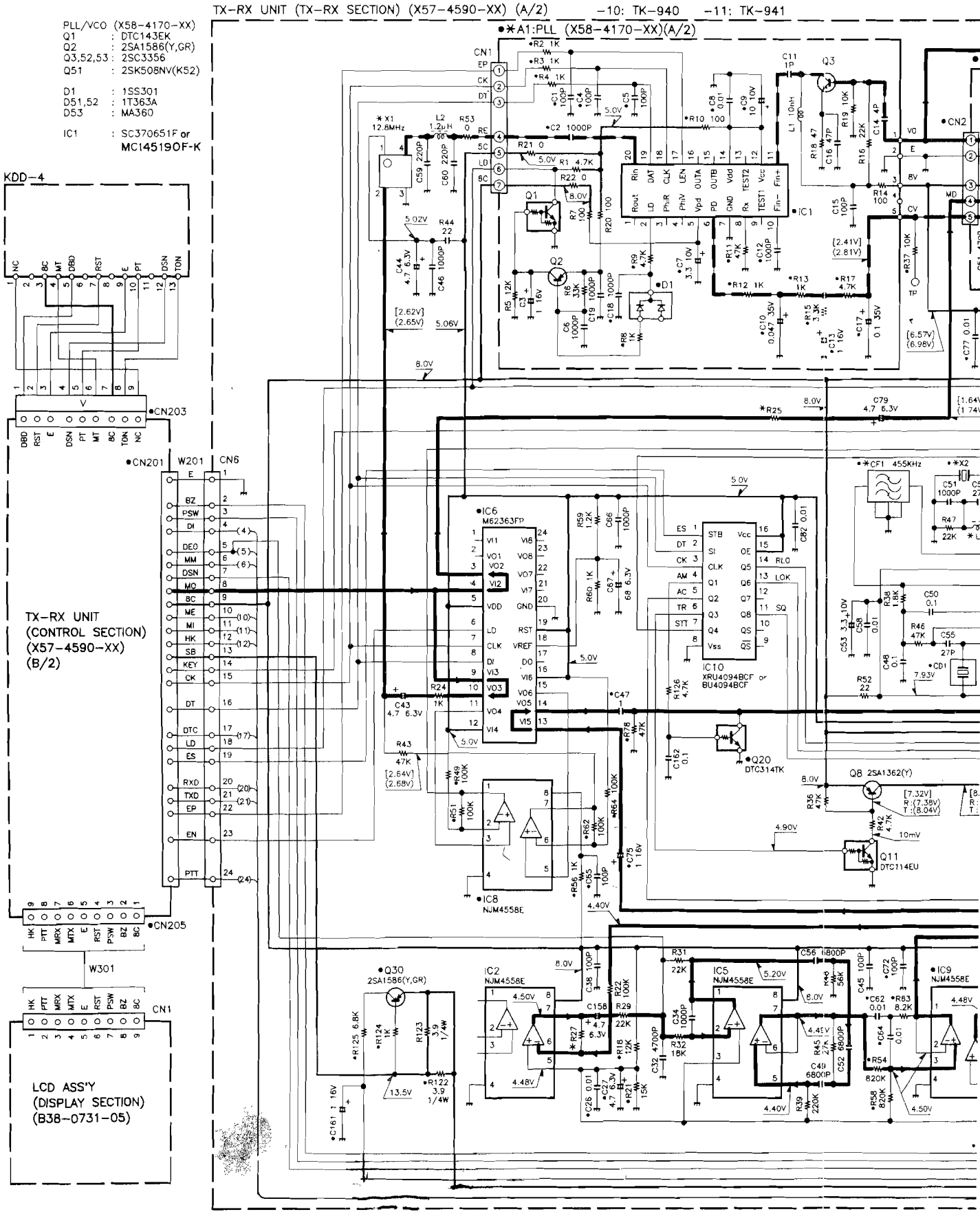

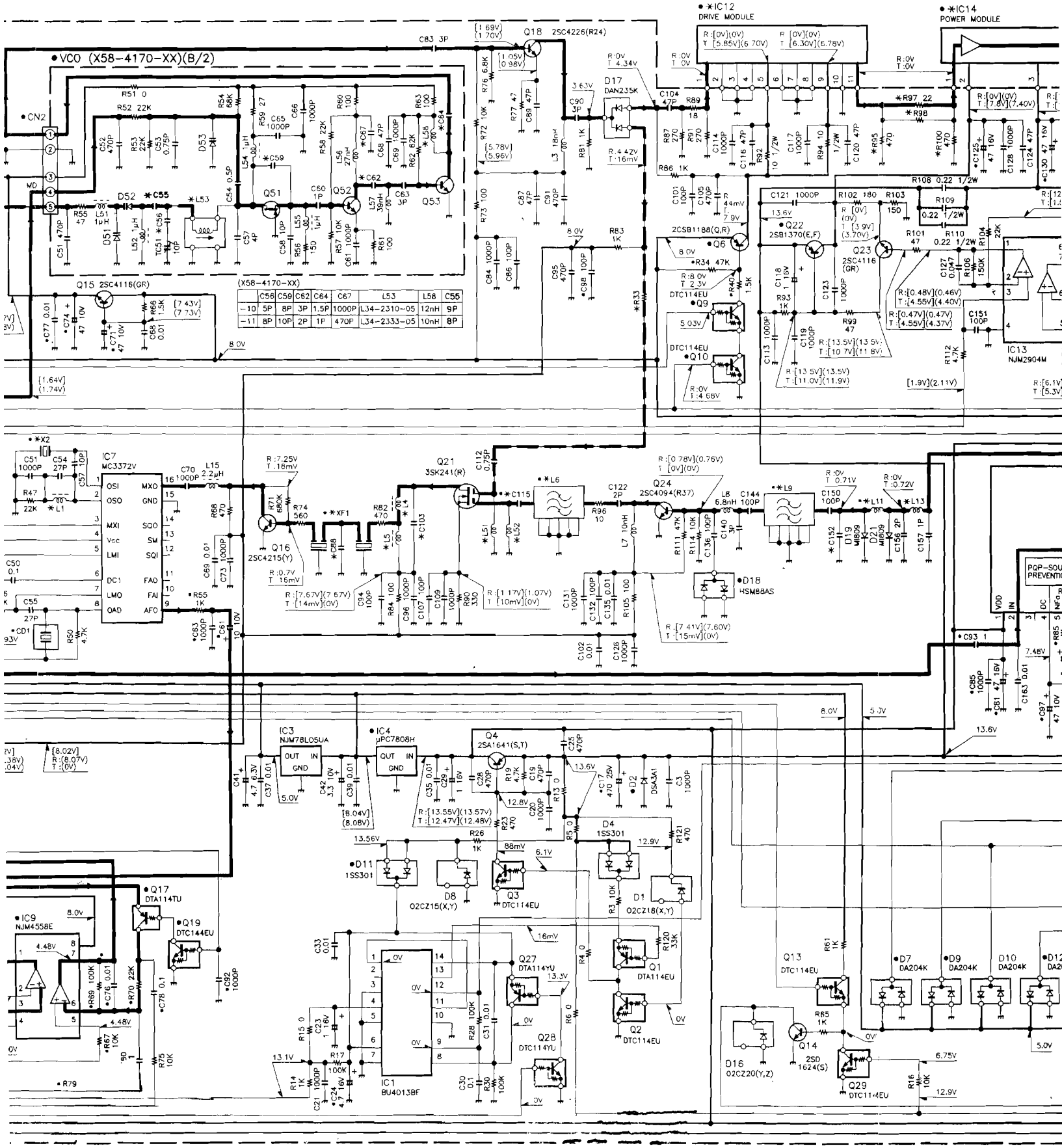

	C56	C59	C62	C64	C67	L53	L58	C55
−10	5P	8P	3P	1.5P	1000P	L34-2310-05	12nH	9P
−11	8P	10P	2P	1P	470P	L34-2333-05	10nH	8P

MODE	UNIT NAME	A1	C88	C10.
T	X57-4590-10	X58-4170-10	8P	27P
TK-	(57-4590-11	X58-4170-11	11P	33P

C152	L1	L4	L5	L6,9	L11,13	L51	L52	R25	R27	R33	R95,97,10
1P	680nH	270nH	150nH	L79-1152-05	L34-1307-05	6.8nH	6.8nH	47K	220K	47	YES
1.5P	820nH	330nH	220nH	L79-1153-05	L34-1313-05	5.6nH	4.7nH	150K	470K	68	NO

SCHEMATIC DIAGRAM TK-940/941

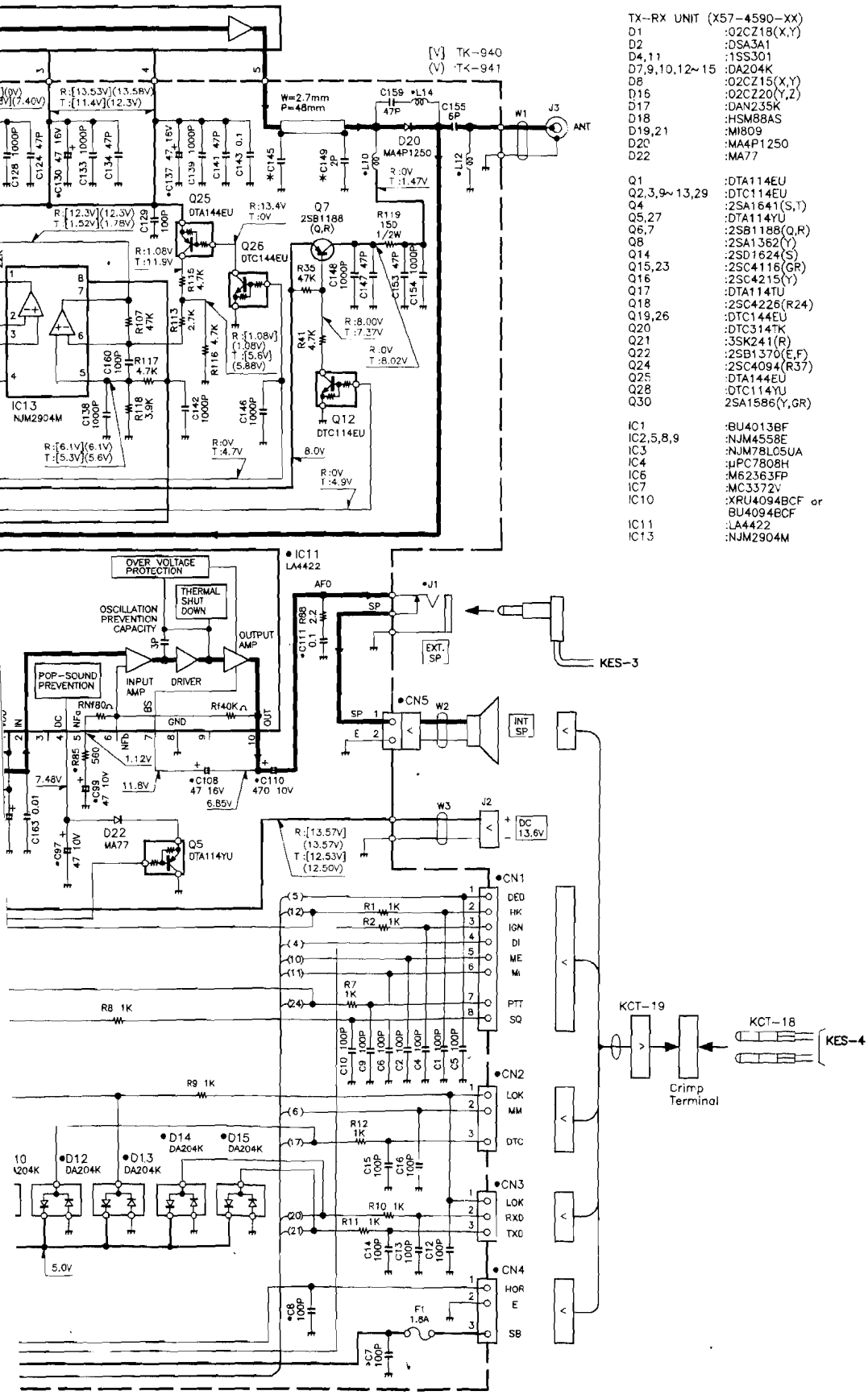

TX-RX UNIT (X57-4590-XX)

D1	:02CZ18(X,Y)
D2	:DSA3A1
D4,11	:1SS301
D7,9,10,12~15	:DA204K
D8	:02CZ15(X,Y)
D16	:02CZ20(Y,Z)
D17	:DAN235K
D18	:HSM88AS
D19,21	:MI809
D20	:MA4P1250
D22	:MA77
Q1	:DTA114EU
Q2,3,9~13,29	:DTC114EU
Q4	:2SA1641(S,T)
Q5,27	:DTA114YU
Q6,7	:2SB1188(Q,R)
Q8	:2SA1362(Y)
Q14	:2SD1624(S)
Q15,23	:2SC4116(GR)
Q16	:2SC4215(Y)
Q17	:DTA114TU
Q18	:2SC4226(R24)
Q19,26	:DTC144EU
Q20	:DTC314TK
Q21	:3SK241(R)
Q22	:2SB1370(E,F)
Q24	:2SC4094(R37)
Q25	:DTA144EU
Q28	:DTC114YU
Q30	2SA1586(Y,GR)
IC1	:BU4013BF
IC2,5,8,9	:NJM4558E
IC3	:NJM78L05UA
IC4	:μPC7808H
IC6	:M62363FP
IC7	:MC3372V
IC10	:XRU4094BCF or BU4094BCF
IC11	:LA4422
IC13	:NJM2904M

33	R95,97,100	R98	X1	X2	XF1	CF1		IC14
7	YES	22	L77-1563-05	44.5825MHz	45.0375MHz	L72-0	75	MHW820-1
8	NO	0	L77-1564-05	38.5825MHz	39.0375MHz	L72-0	81	MHW820-3

TK-940/941 SCHEMATIC DIAGRAM

TX–RX UNIT (CONTROL SECTION) (X57–4590–XX)(B/2)

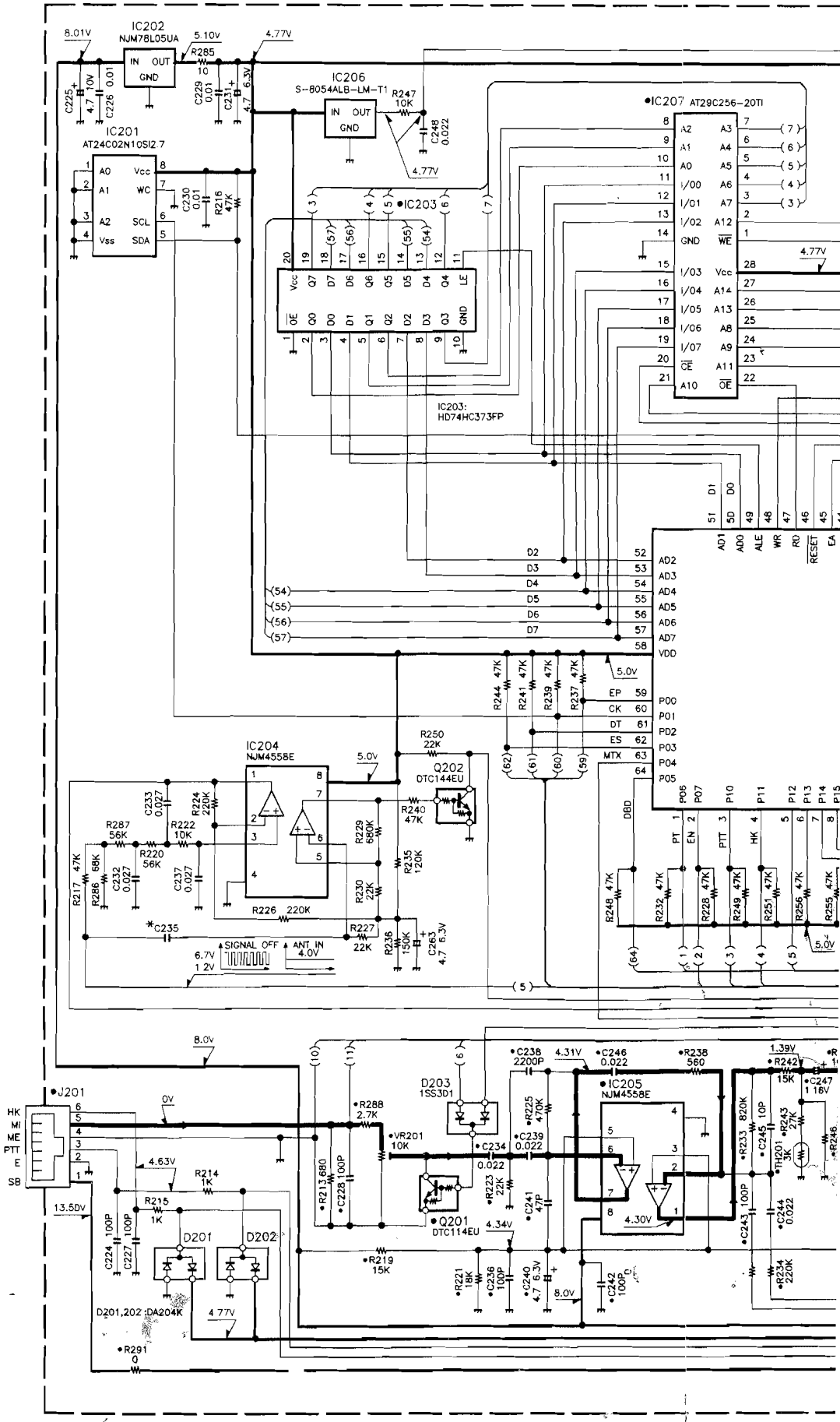

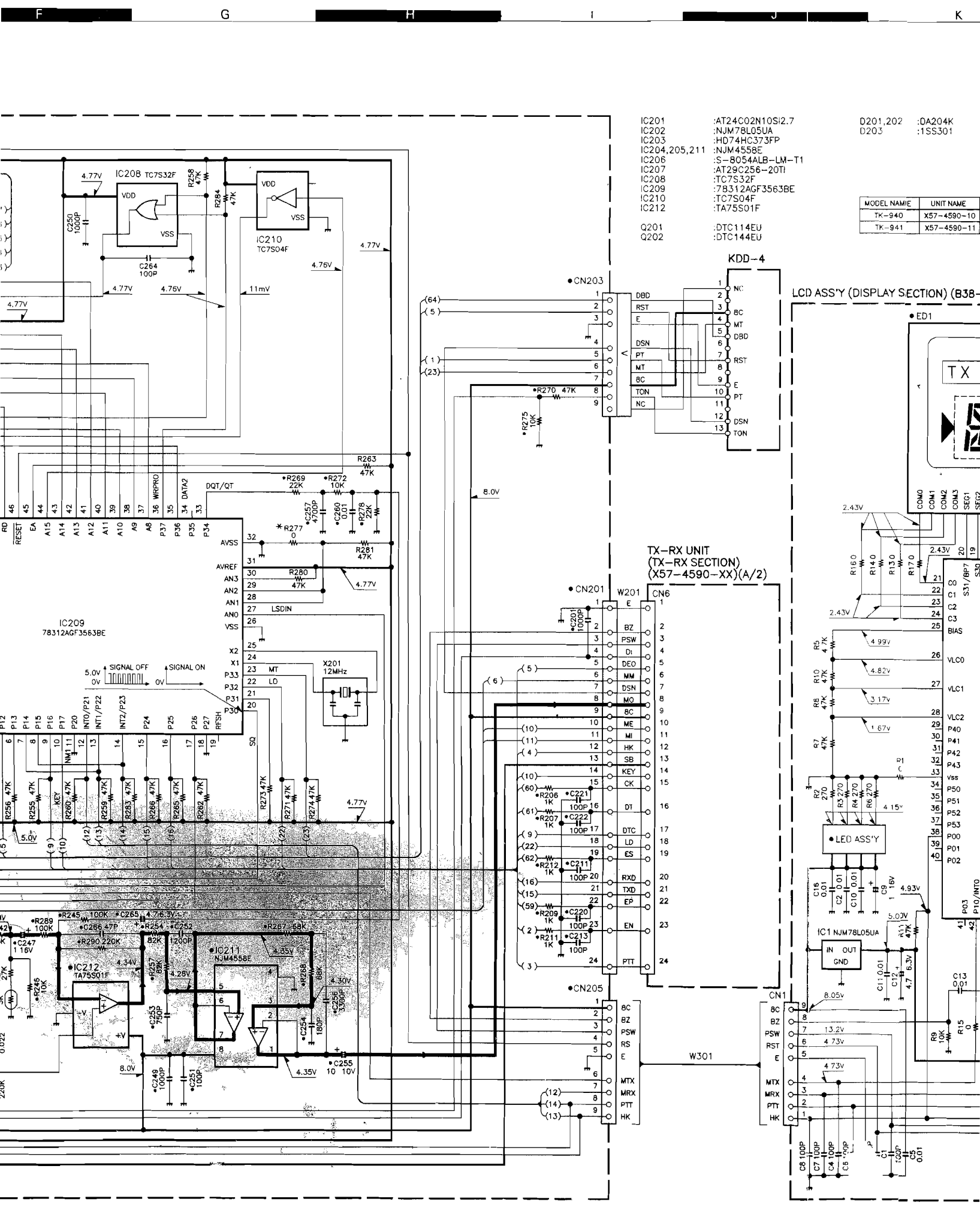

Note) ● Ref. No. : Parts of pattern 1.

ME	C235	R277
0-10	100P	NO
0-11	33P	YES

B38-0731-05)