KFC-HQ570

SERVICE MANUAL

KENWOOD

© 1993-3 PRINTED IN JAPAN
B51-6575-00(O)432

EXTERNAL VIEW

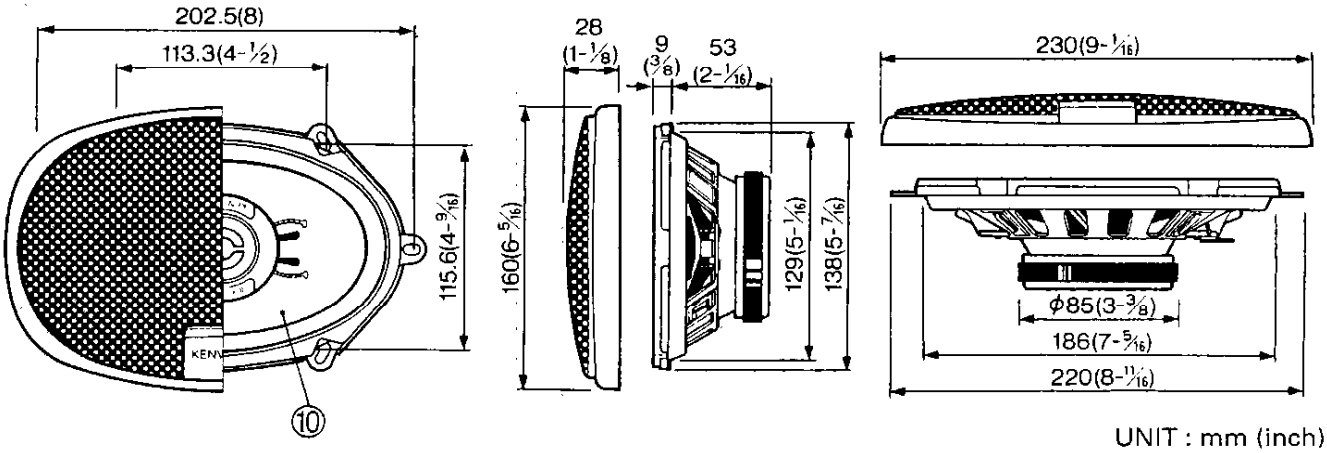

UNIT : mm (inch)

PARTS INCLUDED

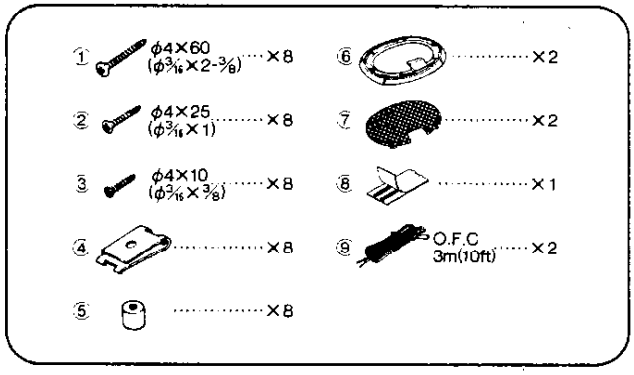

SPECIFICATIONS

Speakers	
Woofer	138×195mm(5×7in)Injection P.P.Cone Type 240g(8.3oz)Magnet
Tweeter	25mm(1in)Balanced Dome Type
Peak Power	120Watts
Frequency Response	40Hz~30,000Hz
Sensitivity	91dB/W at 1m
Impedance	4 Ohms
Net Weight With Grille	1,820g(4.0lb)/Pair

We follow a policy of advancements in development. For this reason specifications may be changed without notice.

PARTS LIST

*New parts
Parts without **Parts No.** are not supplied.

Ref. No. 参照番号	Address 位置	New 新	Parts No. 部品番号	Description 部品名／規格	Destination 仕向	Remark 備考
			KFC-HQ570			
①~④		*	N99-1244-08	SCREW SET		
⑤		*	J31-0332-08	COLLAR		
⑥		*	B06-0774-08	GRILLE		
⑦		*	F09-1065-08	PROTECTOR		
⑧			J69-0103-08	BUTYL RUBER		
⑨		*	E30-5145-08	CORD SET		
⑩		*	T15-0232-08	SPEAKER		

Download from Www.Somanuals.com. All Manuals Search And Download.

Free Manuals Download Website

http://myh66.com

http://usermanuals.us

http://www.somanuals.com

http://www.4manuals.cc

http://www.manual-lib.com

http://www.404manual.com

http://www.luxmanual.com

http://aubethermostatmanual.com

Golf course search by state

http://golfingnear.com

Email search by domain

http://emailbydomain.com

Auto manuals search

http://auto.somanuals.com

TV manuals search

http://tv.somanuals.com