AQUATIC

# KEY WEST

## LUXURY SERIES MODEL # AI6060C

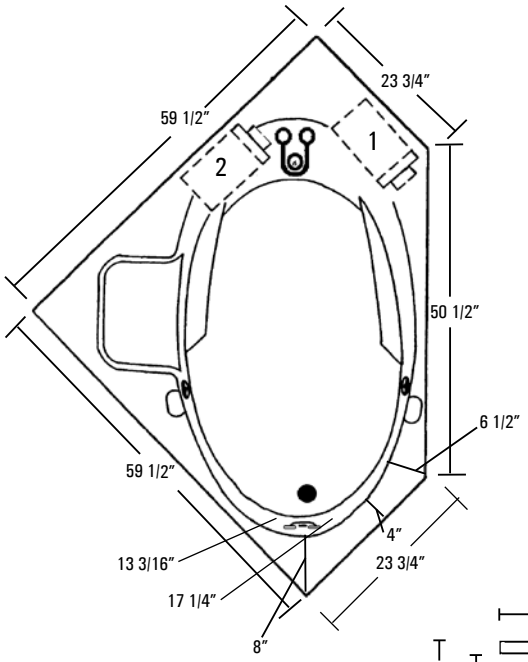

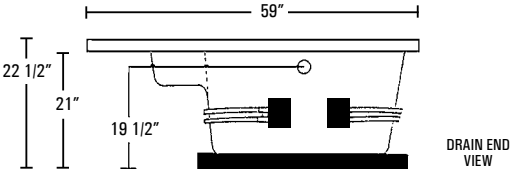


**Rough-In Plumbing Measurements**

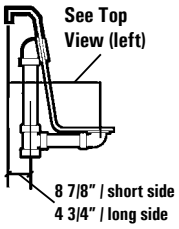


## SPECIFICATIONS:

### GENERAL SPECIFICATIONS:

| | |
|---|---|
| Tub Size | 59 1/2" x 59 1/2" x 22 1/2"<br>151 cm x 151 cm x 57 cm |
| Bathing Well | 44" long<br>25" wide<br>21 1/2" interior depth |
| Shipping Weight | 200 lbs. / 91 kg |
| Tub Weight Filled | 881 lbs. / 400 kg |
| Gallons to Overflow | 90 gal. / 341 L |
| Gallons to Operate | 71 gal. / 269 L |

### ELECTRICAL SPECIFICATIONS:

| | |
|---|---|
| Pump | 1.75 HP; 12 AMP; 110V |
| Requirement | 15 AMP; 110V, separate circuit required protected w/ Class A GFCI |
| Optional Heater | 1.5 kW; 12.5 AMP; 110V |
| Requirement | 15 AMP; 110V, separate circuit required protected w/ Class A GFCI |

### STANDARD EQUIPMENT:

**7 Hydrotherapy Jets including:**
- 4 Full Size Pressure-Flo Hydrotherapy Jets
- 2 StressEaz Neck & Shoulder Therapy Jets
- 1 Recessed Rotary Massage Jet

**Aquatic Quality Features:**
- 1.75 HP Run-Dry Pump with 20-Minute Timer
- Bath-Side On/Off Electronic Button
- "Quiet Pad" Anti-Vibration Pump Mount for Quiet Pump Operation
- 2 Arm Rests
- Slip Resistant Floor
- Pre-leveled ABS Support Base
- Heat-bent Rigid PVC Piping for Optimum Sanitary Conditions
- Durable, Easy to Clean, Lucite® Cast Acrylic Surface
- Available in 8 Standard No-Charge Colors

**UL & IAPMO Listed, Factory Tested**
**Limited Lifetime Warranty**

### OPTIONAL EQUIPMENT:

- Chromatherapy LED Lighting
- Comfort Pillow - Oval or Rectangle
- Jet Finish
  - Chrome, Polished Brass, Gold, Polished Nickel or Satin Nickel
- Bolt-On Grab Bar
  - White, Biscuit, Chrome, Polished Brass, Gold, Polished Nickel, Satin Nickel or Oil Rubbed Bronze
- 1.5 kW Inline Maintenance Heater
- Lift & Turn Waste and Overflow
  - Chrome, Polished Brass, Gold, Polished Nickel, Satin Nickel or Oil Rubbed Bronze
- Cable Drive Waste and Overflow
  - Chrome, Polished Brass, Gold, Polished Nickel, Satin Nickel, Oil Rubbed Bronze or Color Matched (Bone, White and Biscuit Only)
- Factory Installed Rigid ABS Tile Flange
- 2 HP, 3-Speed Run-Dry Pump Upgrade
- Optional Pump Location
- Remote Pump Location
- Color Matched Neo-Angle Acrylic Skirt
- Hand Held Jet - Chrome or Polished Brass
- Premium Colors

*All acrylic colors featured by Aquatic match the industry's leading fixture manufacturers.*

**Fax-On-Demand Document # 1042**

TOLL-FREE, 24-HOUR 1-877-618-7024 FAX INFO

The manufacturer accepts a 1/4" variance. There are variations on each tub and specifications are subject to change as we improve upon our product as required. The dimensions needed for site preparation and structure building should be measured from the tub; Aquatic Industries, Inc. assumes no responsibility for preparatory work.

www.aquaticwhirlpools.com 800.555.5324



Download from Www.Somanuals.com. All Manuals Search And Download.

Free Manuals Download Website

http://myh66.com

http://usermanuals.us

http://www.somanuals.com

http://www.4manuals.cc

http://www.manual-lib.com

http://www.404manual.com

http://www.luxmanual.com

http://aubethermostatmanual.com

Golf course search by state

http://golfingnear.com

Email search by domain

http://emailbydomain.com

Auto manuals search

http://auto.somanuals.com

TV manuals search

http://tv.somanuals.com